STATEMENT OF GENERAL CONFORMANCE

FOR ARCHITECTS/ENGINEERS WHO UTILIZE PLANS, INCLUDING BUT NOT LIMITED TO SHOP DRAWINGS, PREPARED BY OTHER LICENSED DESIGN PROFESSIONALS AND/OR CONSULTANTS

(Application No. 01-11926 File No. 21-H1)

☐ The drawings or sheets listed on the cover or index sheet
☐ This drawing, page of specifications/calculations

have been prepared by other design professionals or consultants who are licensed and/or authorized to prepare such drawings in this state. It has been examined by me for:

1. Design intent and appears to meet the appropriate requirements of Title 24, California Code of Regulations and the project specifications prepared by me, and
2. Coordination with my plans and specifications and is acceptable for incorporation into the construction of this project.

The Statement of General Conformance "shall not be construed as relieving me of my rights, duties, and responsibilities under Sections 17302 and 81138 of the Education Code and Sections 4-336, 4-341 and 4-344" of Title 24, Part 1. (Title 24, Part 1, Section 4-317 [b])

I find that: ☐ All drawings or sheets listed on the cover or index sheet
☐ This drawing or page

☐ is/are in general conformance with the project design intent, and
☐ has/have been coordinated with the project plans and specifications.

Signature _____ Date _____

Architect or Engineer designated to be in general responsible charge

Print Name _____

License _____ Expiration Date _____

☐ is/are in general conformance with the project design intent, and
☐ has/have been coordinated with the project plans and specifications.

Signature _____ Date _____

Architect or Engineer delegated responsibility for this portion of the work.

Print Name _____

License _____ Expiration Date _____

Terra Linda High School

320 Nova Albion Way
San Rafael, CA 94903

Breezeway Waterproofing and Railing

ALLANA BUICK & BERS
Making Buildings Perform Better
990 Commercial Street, Palo Alto, CA. 94303
p 650.543.5600 - f 650.543.5625 - abbae.com

ABBREVIATIONS

∠	ANGLE
CL	CENTERLINE
~	DIAMETER, ROUND
⊥	PERPENDICULAR
#	POUND, NUMBER
A.B.	ANCHOR BOLT
A.B.B.	ALLANA, BUICK AND BERS
A.C.	ASPHALTIC CONCRETE
ACOUS.	ACOUSTICAL
A.D.	AREA DRAIN
ADJ.	ADJUSTABLE, ADJACENT
A.F.F.	ABOVE FINISH FLOOR
ALUM.	ALUMINUM
ALT.	ALTERNATE
A.P.	ACCESS PANEL
APPROX.	APPROXIMATE
ARCH.	ARCHITECT
BD.	BOARD
BITUM.	BITUMINOUS
BLDG.	BUILDING
BLK.	BLOCK
BLKG.	BLOCKING
BM.	BEAM
BOT.	BOTTOM
B.S.	BOTTOM OF SILL
BTWN.	BETWEEN
B.U.R.	BUILT-UP ROOFING
CEM.	CEMENT
CER.	CERAMIC
C.J.	CONTROL JOINT
CLG.	CEILING
CLKG.	CAULKING
C.O.	CLEAN-OUT
CLR.	CLEAR
COL.	COLUMN
COMP.	COMPOSITION
CONC.	CONCRETE
CONN.	CONNECTION
CONST.	CONSTRUCTION
CONT.	CONTINUOUS
CORR.	CORRIDOR
CTSK.	COUNTERSINK
CNTR.	COUNTER
CPT.	CARPET
CTR.	CENTER
D.	DEEP
DBL.	DOUBLE
DEMO.	DEMOLISH
DET.	DETAIL
D.F.	DOUGLAS FIR
DIA.	DIAMETER
DIAG.	DIAGONAL
DIM.	DIMENSION
DISP.	DISPENSER
DN.	DOWN
DR.	DOOR
D.S.	DOWN SPOUT
DWG.	DRAWING

E.	EAST
(E)	EXISTING
EA.	EACH
E.B.	EXPANSION BOLT
E.F.	EXHAUST FAN
E.J.	EXPANSION JOINT
ELEC.	ELECTRICAL
ELEV.	ELEVATION
EMER.	EMERGENCY
ENCL.	ENCLOSURE
E.P.	ELECTRICAL PANEL
EQ.	EQUAL
EQUIP.	EQUIPMENT
E.W.	EACH WAY
EXP.	EXPANSION
EXT.	EXTERIOR
F.D.	FLOOR DRAIN
FDN.	FOUNDATION
F.A.	FIRE EXTINGUISHER
F.A.C.	FIRE EXTINGUISHER CABINET
F.B.	FINISH FLOOR
FIN.	FINISH
FIXT.	FIXTURE
FL.	FLOOR
FLASH.	FLASHING
FLUOR.	FLUORESCENT
F.O.	FACE OF
F.O.C.	FACE OF CONCRETE
F.O.F.	FACE OF FINISH
F.O.S.	FACE OF STUDS
FPRF.	FIREPROOF
FRMG.	FRAMING
FT.	FOOT, FEET
FTG.	FOOTING
FND.	FOUNDATION
FURR.	FURRING
GA.	GAUGE
GALV.	GALVANIZED
GWB.	GYPSUM BOARD
G.I.	GALVANIZED IRON
GL.	GLASS
GLB	GLUE-LAMINATED BEAM
GND.	GROUND
GSM	GALVANIZED SHEET METAL
GR.	GRADE
GYP.	GYPSUM
H.R.	HAND RAIL
H.B.	HOSE BIBB
H.C.	HOLLOW CORE
HDR.	HEADER
HDWE.	HARDWARE
H.M.	HOLLOW METAL
HR.	HOUR
HT.	HEIGHT
I.D.	INSIDE DIAMETER
INSUL.	INSULATION
INT.	INTERIOR

JAN	JANITOR
JST.	JOIST
JT.	JOINT
LAM.	LAMINATE
LOC.	LOCATION
L.	LONG
LT.	LIGHT
MAX.	MAXIMUM
M.B.	MACHINE BOLT
MECH.	MECHANICAL
MEM.	MEMBRANE
MFR.	MANUFACTURER
MIN.	MINIMUM
MISC.	MISCELLANEOUS
MTD.	MOUNTED
MTL.	METAL
MULL.	MULLION
N.	NORTH
N.I.C.	NOT IN CONTRACT
NO.	NUMBER
NOM.	NOMINAL
N.T.S.	NOT TO SCALE
OA	OVERALL
OBSC.	OBSCURE
O.C.	ON CENTER
O.D.	OUTSIDE DIAMETER
O.F.C.I.	OWNER FURNISHED AND CONTRACTOR INSTALLED
OFF.	OFFICE
OH	OPPOSITE HAND
OPNG.	OPENING
OPP.	OPPOSITE
PART.	PARTITION
P.B.	PARTICLE BOARD
P.D.	PLANTER DRAIN
PLBG.	PLUMBING
PNT.	PAINT
PREFAB.	PRE-FABRICATED
P.T.	PRESSURE TREATED
PL.	PLATE
P. LAM.	PLASTIC LAMINATE
PLAS.	PLASTER
PLYWD.	PLYWOOD
P.O.C.	POINT OF CONNECTION
PR.	PAIR
R	RADIUS
(R)	REMOVE
R.D.	ROOF DRAIN
R.D.M.	REMOVE DAMAGED MATERIAL
RDWD.	REDWOOD
REF.	REFERENCE
REG.	REGISTER
REINF.	REINFORCED
RESIL.	RESILIENT
RET.	RETAINING
REV.	REVISION, REVISED
RM.	ROOM

R.O.	ROUGH OPENING
RSR	RISER
RWL	RAIN WATER LEADER
S.A.C.	SUSPENDED ACOUSTICAL CEILING
S.A.D.	SEE ARCHITECTURAL DRAWINGS
SAF	SELF ADHERING FLASHING
S.C.	SOLID CORE
S.C.D.	SEE CIVIL DRAWINGS
SCHED.	SCHEDULE
SDBO	SEE DRAWINGS BY OTHERS
SECT.	SECTION
S.E.D.	SEE ELECTRICAL DWGS.
SHT.	SHEET
SIM.	SIMILAR
S.L.D.	SEE LANDSCAPE DRAWINGS
S.M.	SHEET METAL
S.M.D.	SEE MECHANICAL DRAWINGS
SPEC.	SPECIFICATION
SQ.	SQUARE
S.S.	STAINLESS STEEL
S.S.D.	SEE STRUCTURAL DRAWINGS
STD.	STANDARD
STL.	STEEL
STOR.	STORAGE
STRUCT.	STRUCTURAL
SUSP.	SUSPENDED
S.V.	SHEET VINYL
SYM.	SYMMETRICAL
T.C.	TOP OF CURB
T.O.C.	TOP OF CONCRETE
T.D.	TIE DOWN
TEL.	TELEPHONE
TEMP.	TEMPERED
THK.	THICK
THR.	THRESHOLD
T.O.	TOP OF
T.O.C.	TOP OF CONCRETE
T.O.S.	TOP OF SLAB
TYP.	TYPICAL
U.O.N.	UNLESS OTHERWISE NOTED
UR.	URINAL
V.C.T.	VINYL COMPOSITION TILE
VERT.	VERTICAL
V.I.F.	VERIFY IN FIELD
W	WIDE / WIDTH
W/	WITH
W.I.	WROUGHT IRON
WD.	WOOD
W.O.	WHERE OCCURS
W/O	WITHOUT
W.P.	WATERPROOFING
W.R.	WATER RESISTANT
WRB	WEATHER RESISTIVE BARRIER
W.S.	WOOD SCREW
WSCT.	WAINSCOT
WT.	WEIGHT
W.W.F.	WELDED WIRE FABRIC

SCOPE OF WORK

THE WORK DESCRIBED BELOW IS A BRIEF DESCRIPTION; A THOROUGH DESCRIPTION IS CONTAINED WITHIN THE ENTIRETY OF THE CONSTRUCTION DOCUMENTS.

A. REMOVAL AND REPLACEMENT OF SECOND FLOOR EXTERIOR WALKWAY COATING SYSTEM AND ASSOCIATED FLASHING. RESLOPE WALKWAY TO DRAIN.

B. INTEGRATION OF WALKWAY COATING INTO EXISTING DOOR OPENINGS. DOOR REPLACEMENT BY OWNER. AS PART OF DSA PROJECT 01-118754.

C. INSTALLATION OF EXPANSION JOINT AT EAST END OF WALKWAY.

D. REMOVAL OF ALUMINUM GUARDRAIL RAILINGS AND REPLACEMENT WITH STEEL GUARDRAIL RAILINGS.

ALL AREAS
1. INSPECTION OF EXISTING SUBSTRATES AND STRUCTURAL MEMBERS FOR DAMAGE WHERE EXPOSED DURING THE COURSE OF THE WORK. COORDINATE AND VERIFY INSPECTION PROCEDURES AND FINDINGS WITH THE OWNER'S REPRESENTATIVE.
2. PROTECTION AND MAINTENANCE OF EXISTING FIRE RATED ASSEMBLIES.
3. PROVISION OF PROTECTION AND EGRESS FOR BUILDING OCCUPANTS. BUILDING IS TO REMAIN OCCUPIED DURING THE COURSE OF THE WORK.
4. PROVISION OF PROTECTION FOR EXISTING DISABILITY ACCESS, PER CBC CHAPTER 11B.

CODES AND REGULATIONS

USE THE FOLLOWING CODES AND REGULATIONS WITH LATEST AMENDMENTS AND SUPPLEMENTS:

1. CALIFORNIA CODE OF REGULATIONS (CCR) TITLE 24, 2019:
   - A. 2019 CALIFORNIA BUILDING STANDARDS ADMINISTRATIVE CODE (CAC) PART 1, TITLE 24 CCR
   - B. 2019 CALIFORNIA BUILDING CODE VOLUMES 1 AND 2 (CBC) PART 2, TITLE 24, CCR
   - C. 2019 CALIFORNIA ENERGY CODE PART 6, TITLE 24, CCR
   - D. 2019 CALIFORNIA FIRE CODE (CFC) PART 9, TITLE 24, CCR
   - E. 2019 CALIFORNIA GREEN BUILDING STANDARDS CODE (CALGREEN) PART 11, TITLE 24 CCR
   - F. 2019 CALIFORNIA REFERENCED STANDARDS CODE, PART 12, TITLE 24 CCR
   - G. TITLE 19 CCR, PUBLIC SAFETY, STATE FIRE MARSHAL REGULATIONS.
2. 2010 ADA STANDARDS FOR ACCESSIBLE DESIGN
3. CONSTRUCTION SAFETY (CAL-OSHA), CCR TITLE 8.
4. 2016 ASME A17.1 SAFETY CODE FOR ELEVATORS AND ESCALATORS.

SYMBOLS LEGEND

SYMBOL	DESCRIPTION	DETAIL NO. (IF ANY)
CRICKETS / SLOPE		
	(E) SLOPE	
	SLOPE	
MISCELLANEOUS		
B 3.0	DETAIL NUMBER / SECTION CUT / SHEET NUMBER	
B 3.0	DETAIL NUMBER / DETAIL CALL OUT / SHEET NUMBER	
#	WINDOW TYPE	
#	DOOR TYPE	
#	SHEET KEYED NOTE	

DRAWING INDEX

SHEET COUNT: 18

ARCHITECTURAL

A000	COVER SHEET, GENERAL NOTES AND INDEX
A011	PARTIAL SITE PLAN
A012	FIRST FLOOR PLAN
A013	SECOND FLOOR PLAN
A100	WALKWAY SECOND FLOOR DEMOLITION PLAN
A101	WALKWAY SECOND FLOOR PLAN
A201	WALKWAY NORTH ELEVATION
A202	WALKWAY SECTION
A301	DECK COATING DETAILS
A302	DECK COATING DETAILS
A401	PHOTOS

STRUCTURAL

S000	STRUCTURAL NOTES, SPECIAL INSPECTIONS AND TESTING
S0.0	STRUCTURAL NOTES
S1.0	EXISTING FLOOR PLAN
S2.0	EXISTING BRIDGE ELEVATION
S3.0	SECTION & DETAILS

DSA REQUIREMENTS

A. ALL WORK SHALL CONFORM TO THE 2019 EDITION OF THE TITLE 24 CODE OF REGULATIONS C.C.R.

B. AS A FACILITY WHICH COMES UNDER THE APPROVAL AND AUTHORITY OF THE DIVISION OF THE STATE ARCHITECT (DSA), THIS PROJECT IS SUBJECT TO DRAWING AND JOBSITE REVIEW BY A REPRESENTATIVE OF DSA.

C. CHANGES TO THE APPROVED DRAWINGS AND SPECIFICATIONS SHALL BE MADE BY ADDENDA ON CONSTRUCTION CHANGE DOCUMENTS APPROVED BY THE DIVISION OR STATE ARCHITECT AS REQUIRED BY SECTION 4-338; PART 1, TITLE 24 C.C.R.

D. A COPY OF PARTS 1 THRU 6 OF TITLE 24 SHALL BE KEPT AND AVAILABLE IN THE FIELD DURING CONSTRUCTION.

E. THE DIVISION OF STATE ARCHITECT SHALL BE NOTIFIED OF THE START OF CONSTRUCTION AND PRIOR TO THE PLACEMENT OF CONCRETE PER SECTION 4-331, PART 1, TITLE 24, C.C.R.

F. THE DIVISION OF STATE ARCHITECT IS EXEMPT FROM ARBITRATION OR MEDIATION PROCEDURES.

G. SUPERVISION BY THE DIVISION OF THE STATE ARCHITECT PER DIVISION; PER SECTION 4-334, PART 1, TITLE 24, C.C.R.

H. ADMINISTRATION OF CONSTRUCTION PER PART 1, TITLE 24, C.C.R.
-VERIFIED REPORTS PER SECTION 4-336, PART 1, TITLE 24, C.C.R.
-DUTIES OF ARCHITECT PER SECTION 4-333(a), 4-343, 4-341, PART 1, TITLE 24, C.C.R.
-DUTIES OF CONTRACTOR PER SECTION 4-343, PART 1, TITLE 24, C.C.R

I. TESTING AND INSPECTION:
-TESTS AND TESTING LABORATORIES PER SECT 4-335
-SPECIAL INSPECTION PER SECT. 4-333(d)

J. ALL TESTS TO CONFORM TO REQUIREMENTS OF SECTION 4-335; PART 1, TITLE 24, C.C.R,

K. TESTS OF MATERIALS AND TESTING LABORATORY SHALL BE IN ACCORDANCE WITH SECTION 4-335; PART 1, TITLE 24, C.C.R. AND THE DISTRICT SHALL EMPLOY AND PAY THE LABORATORY. COSTS OR RE-TEST MAY BE BACK CHARGED TO THE CONTRACTOR.

L. INSPECTOR SHALL BE APPROVED BY DSA. INSPECTION SHALL BE IN ACCORDANCE WITH SECTION 4-333(B).

M. THE INTENT OF THESE DRAWINGS AND SPECIFICATIONS IS THAT THE WORK OF THE ALTERATION, REHABILITATION OR RECONSTRUCTION IS TO BE IN ACCORDANCE WITH TITLE 24, CCR. SHOULD ANY EXISTING CONDITIONS SUCH AS DETERIORATION OR NON-COMPLYING CONSTRUCTION BE DISCOVERED WHICH IS NOT COVERED BY THE CONTRACT DOCUMENTS WHEREIN THE FINISHED WORK WILL NOT COMPLY WITH TITLE 24, CCR, A CONSTRUCTION CHANGE DOCUMENT (CCD), OR A SEPARATE SET OF PLANS AND SPECIFICATIONS, DETAILING AND SPECIFYING THE REQUIRED WORK SHALL BE SUBMITTED TO AND APPROVED BY DSA BEFORE PROCEEDING WITH THE WORK. (SECTION 4-317(C), PART 1, TITLE 24, CCR)

N. INSPECTOR OF RECORD REQUIREMENTS:
   - a) ONE OR MORE INSPECTORS EMPLOYED BY THE OWNER IN ACCORDANCE WITH THE REQUIREMENTS OF TITLE 24 OF THE CALIFORNIA CODE OF REGULATIONS WILL BE ASSIGNED TO THE WORK. THE INSPECTOR'S DUTIES ARE SPECIFICALLY DEFINED IN SECTION 4-342 OF SAID TITLE 24; PART 1 AND IN ADDITION SHALL BE STIPULATED IN INTERPRETATION OF REGULATION DOCUMENT IR A-8.
   - b) INSPECTOR SHALL BE CERTIFIED AS A CLASS (2) INSPECTOR THOUGH THE DIVISION OF THE STATE ARCHITECT INSPECTOR EXAMINATION PROGRAM. INSPECTOR SHALL ALSO BE SPECIFICALLY APPROVED BY THE DIVISION OF THE STATE ARCHITECT FOR THIS PROJECT AT LEAST 10 DAYS PRIOR TO THE STATE OF ANY WORK FOR THIS PROJECT.
   - c) COMPLY WITH CFC CHAPTER 10.

O. NO DEMOLITION SHALL BEGIN UNTIL PLANS INCLUDING THE DEMOLITION WORK HAVE BEEN APPROVED BY DSA.

VICINITY MAP

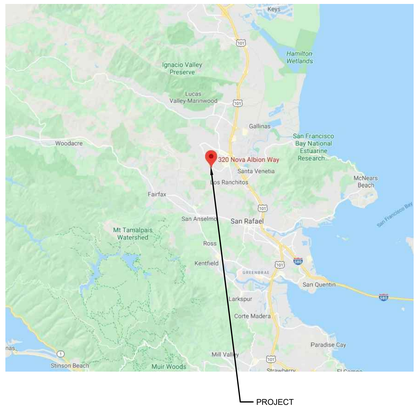

LOCATION MAP

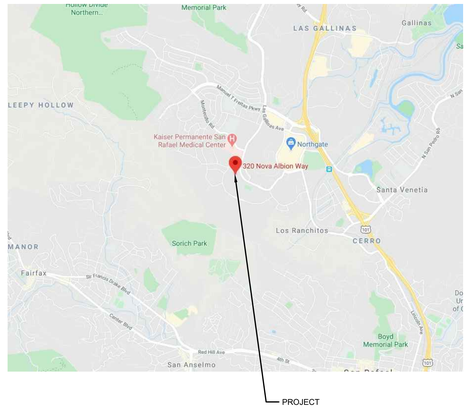

CODE ANALYSIS

YEAR OF ORIGINAL CONSTRUCTION:	1961 (ESTIMATED)
ORIGINAL BUILDING CODE:	CALIFORNIA BUILDING CODE - 2001 EDITION
(E) BUILDING TYPE:	TYPE II-A - 1 HOUR
(E) BUILDING OCCUPANCY:	GROUP E - EDUCATION
(E) WALKWAY AREA:	720 SF
(E) STORIES:	TWO STORIES

PROJECT DIRECTORY

OWNER
SAN RAFAEL CITY SCHOOLS
310 NOVA ALBION WAY
SAN RAFAEL, CA 94903
415.492.3200
DZAICH@SRCS.ORG

ARCHITECT
ALLANA, BUICK, & BERS
990 COMMERCIAL STREET
PALO ALTO, CA 94303
650.543.5600
AROBERTSON@ABBAE.COM

STRUCTURAL ENGINEER
ABR ENGINEERS
4340 ALMADEN EXPRESSWAY, SUITE 220
SAN JOSE, CA 95118
408.280.7227
ABR@ABRENGINEERS.COM

GENERAL NOTES

A. THESE DRAWINGS HAVE BEEN MADE FROM BUILDING RECORD DRAWINGS. BIDDER SHALL VISIT THE SITE AND PROJECT TO FIELD VERIFY EXISTING CONDITIONS AFFECTING HIS WORK PRIOR TO BIDDING. ANY EXISTING CONDITION FOUND NOT IN ACCORDANCE WITH THE CONTRACT DOCUMENTS SHALL BE BROUGHT TO THE ATTENTION OF THE CONSULTANTS IMMEDIATELY, PRIOR TO BIDDING OR START OF ANY WORK.

B. NOTES, SECTIONS, AND DETAILS DESCRIBING THE TYPE OF COMPONENT OR NECESSARY WORK TO THAT COMPONENT ARE TYPICAL FOR ALL SIMILAR ITEMS, AND THE NOTE, SECTION, OR DETAIL SHALL APPLY AS IF CALLED OUT SEPARATELY AT EACH LOCATION. THE DETAILS REFLECT A DESIGN OF THE SPECIFIC CONDITION(S) DETAILED. IF, DURING THE PROGRESS OF THE WORK, EXISTING CONDITIONS DIFFER FROM THOSE INDICATED ON THE DRAWINGS TO THE EXTENT THAT THE CONTRACTOR MUST MAKE MODIFICATIONS TO THE GIVEN DETAILS TO MAKE THE DETAIL COMPATIBLE WITH THE EXISTING CONDITIONS, THE CONTRACTOR SHALL OBTAIN A REVISED DETAIL FROM THE CONSULTANTS PRIOR TO THAT DETAIL BEING CONSTRUCTED.

C. CONFLICTS AND/OR PROBLEMS SHALL BE REPORTED PRIOR TO BIDDING FOR RESOLUTION. FAILURE TO REPORT THESE CONFLICTS PLACES THE RESPONSIBILITY ON THE CONTRACTOR TO COMPLETE THE WORK IN ACCORDANCE WITH THE CONTRACT DOCUMENTS, AT THE CONSULTANTS DIRECTION, AT NO ADDITIONAL COST TO THE OWNER.

D. ALL NOTES DESCRIBING COMPONENTS, SYSTEMS, OR CONSTRUCTION NOT NOTED AS "(E)" OR "EXISTING" ARE NEW, AND ARE REQUIRED TO BE PROVIDED AND INSTALLED IN ACCORDANCE WITH THE CONTRACT DOCUMENTS.

E. CONTRACTOR SHALL PROVIDE SHOP DRAWINGS FOR APPROVAL FOR ALL SPECIALTY CONNECTIONS, TRANSITIONS, AND TERMINATIONS OF ALL ITEMS OF THE WORK. INCLUDING SADDLES, FLASHINGS, AND OTHER INDUSTRY RECOGNIZED ITEMS THAT MAKE THE WORK COMPLETE.

F. ALL SEALANT WORK SHALL BE IN ACCORDANCE WITH THE SWRI AND THE SEALANT MATERIAL MANUFACTURER. REQUIREMENTS SHOWN IN THE CONSTRUCTION DOCUMENTS ARE ABOVE AND BEYOND THAT REQUIRED BY THE REFERENCED STANDARDS. IF CONFLICTS SHOULD OCCUR BETWEEN STANDARDS AND/OR THE CONSTRUCTION DOCUMENTS, UTILIZE THE HIGHEST QUALITY OR MORE STRINGENT REQUIREMENT.

G. THERE ARE SPECIFICATIONS BOUND SEPARATELY FROM THE CONSTRUCTION DRAWINGS THAT ARE A PART OF THE CONTRACT. THE SPECIFICATIONS AND DRAWINGS ARE COMPLIMENTARY TO ONE ANOTHER AND ARE BOTH REQUIRED TO FULLY DESCRIBE THE CONTRACTOR'S RESPONSIBILITIES UNDER THE CONTRACT. THE DRAWINGS TYPICALLY INDICATE SIZE, FORM, QUANTITY, RELATIONSHIP, AND GENERIC TYPE; THE SPECIFICATIONS TYPICALLY DEFINE THE QUALITATIVE REQUIREMENTS FOR PRODUCTS, MATERIALS, AND WORKMANSHIP. WHAT IS CALLED FOR BY EITHER ONE SHALL BE AS BINDING AS IF CALLED FOR BY ALL.

LICENSED ARCHITECT
STEPHEN LEE LIPPE
C12,273
EXP. 7/31/21
STATE OF CALIFORNIA

Terra Linda High School
320 Nova Albion Way
San Rafael, CA 94903

Breezeway Waterproofing and Railing

FOR:
Greystone West
621 W Spain Street
Sonoma, CA 95476

ISSUE

Mark	Description	Date
	Bid Set	03/19/2021
	DSA Re-Submission	02/22/2021
	DSA Submission	12/11/2020

DATE	07.24.2020
PROJECT NO.	19-6104.01
CAD DWG FILE	6104_A000.dwg
DRAWN BY	AR
CHECKED BY	EB

© COPYRIGHT ALLANA BUICK & BERS, INC. 2020

SHEET TITLE
COVER SHEET, GENERAL NOTES AND INDEX

SCALE: NOTED ON DRAWINGS

SHEET **A000**

DSA RESUBMISSION, 02/22/2021

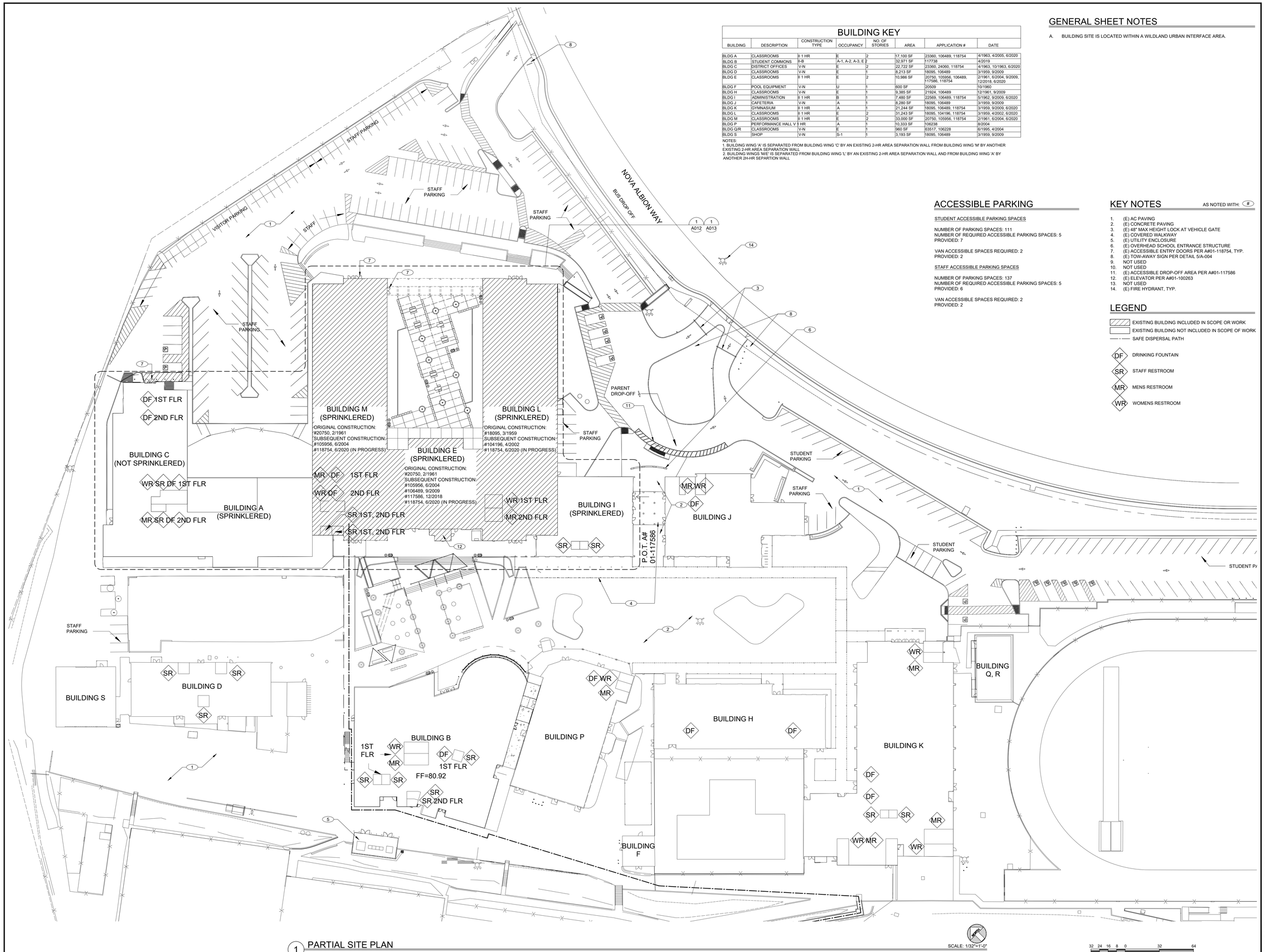

1 PARTIAL SITE PLAN

SCALE: 1/32"=1'-0"

32 24 16 8 0 32 64

SCALE: 1/32" = 1'-0"

BUILDING KEY

BUILDING	DESCRIPTION	CONSTRUCTION TYPE	OCCUPANCY	NO. OF STORIES	AREA	APPLICATION #	DATE
BLDG A	CLASSROOMS	II 1 HR	E	2	17,100 SF	23360, 106489, 118754	4/1963, 4/2005, 6/2020
BLDG B	STUDENT COMMONS	II-B	A-1, A-2, A-3, E	2	32,971 SF	117738	4/2019
BLDG C	DISTRICT OFFICES	V-N	E	2	22,722 SF	23360, 24060, 118754	4/1963, 10/1963, 6/2020
BLDG D	CLASSROOMS	V-N	E	1	8,213 SF	18095, 106489	3/1959, 9/2009
BLDG E	CLASSROOMS	II 1 HR	E	2	10,986 SF	20750, 105956, 106489, 117586, 118754	2/1961, 6/2004, 9/2009, 12/2018, 6/2020
BLDG F	POOL EQUIPMENT	V-N	U	1	600 SF	20509	10/1960
BLDG H	CLASSROOMS	V-N	E	1	9,385 SF	21924, 106489	12/1961, 9/2009
BLDG I	ADMINISTRATION	II 1 HR	B	1	7,480 SF	22569, 106489, 118754	5/1962, 9/2009, 6/2020
BLDG J	CAFETERIA	V-N	A	1	8,280 SF	18095, 106489	3/1959, 9/2009
BLDG K	GYMNASIUM	II 1 HR	A	1	21,244 SF	18095, 106489, 118754	3/1959, 9/2009, 6/2020
BLDG L	CLASSROOMS	II 1 HR	E	2	31,243 SF	18095, 104196, 118754	3/1959, 4/2002, 6/2020
BLDG M	CLASSROOMS	II 1 HR	E	2	33,000 SF	20750, 105956, 118754	2/1961, 6/2004, 6/2020
BLDG P	PERFORMANCE HALL V	1 HR	A	1	10,333 SF	106238	8/2004
BLDG Q/R	CLASSROOMS	V-N	E	1	960 SF	63517, 106228	6/1995, 4/2004
BLDG S	SHOP	V-N	S-1	1	3,193 SF	18095, 106489	3/1959, 9/2009

NOTES:
1. BUILDING WING 'A' IS SEPARATED FROM BUILDING WING 'C' BY AN EXISTING 2-HR AREA SEPARATION WALL FROM BUILDING WING 'M' BY ANOTHER EXISTING 2-HR AREA SEPARATION WALL
2. BUILDING WINGS 'M/E' IS SEPARATED FROM BUILDING WING 'L' BY AN EXISTING 2-HR AREA SEPARATION WALL AND FROM BUILDING WING 'A' BY ANOTHER 2H-HR SEPARTION WALL

GENERAL SHEET NOTES

A. BUILDING SITE IS LOCATED WITHIN A WILDLAND URBAN INTERFACE AREA.

ACCESSIBLE PARKING

STUDENT ACCESSIBLE PARKING SPACES

NUMBER OF PARKING SPACES: 111
NUMBER OF REQUIRED ACCESSIBLE PARKING SPACES: 5
PROVIDED: 7

VAN ACCESSIBLE SPACES REQUIRED: 2
PROVIDED: 2

STAFF ACCESSIBLE PARKING SPACES

NUMBER OF PARKING SPACES: 137
NUMBER OF REQUIRED ACCESSIBLE PARKING SPACES: 5
PROVIDED: 6

VAN ACCESSIBLE SPACES REQUIRED: 2
PROVIDED: 2

KEY NOTES

AS NOTED WITH: #

1. (E) AC PAVING
2. (E) CONCRETE PAVING
3. (E) 48" MAX HEIGHT LOCK AT VEHICLE GATE
4. (E) COVERED WALKWAY
5. (E) UTILITY ENCLOSURE
6. (E) OVERHEAD SCHOOL ENTRANCE STRUCTURE
7. (E) ACCESSIBLE ENTRY DOORS PER A#01-118754, TYP.
8. (E) TOW-AWAY SIGN PER DETAIL 5/A-004
9. NOT USED
10. NOT USED
11. (E) ACCESSIBLE DROP-OFF AREA PER A#01-117586
12. (E) ELEVATOR PER A#01-100263
13. NOT USED
14. (E) FIRE HYDRANT, TYP.

LEGEND

- EXISTING BUILDING INCLUDED IN SCOPE OR WORK
- EXISTING BUILDING NOT INCLUDED IN SCOPE OF WORK
- SAFE DISPERSAL PATH
- DF — DRINKING FOUNTAIN
- SR — STAFF RESTROOM
- MR — MENS RESTROOM
- WR — WOMENS RESTROOM

ALLANA BUICK & BERS
Making Buildings Perform Better
990 Commercial Street, Palo Alto, CA. 94303
p 650.543.5600 - f 650.543.5625 - abbae.com

LICENSED ARCHITECT STEPHEN LEE LIPPE C12,273 EXP. 7/31/21 STATE OF CALIFORNIA

Terra Linda High School
320 Nova Albion Way
San Rafael, CA 94903

Breezeway Waterproofing and Railing

FOR:
Greystone West
621 W Spain Street
Sonoma, CA 95476

ISSUE

Mark	Description	Date
	Bid Set	03/19/2021
	DSA Re-Submission	02/22/2021
	DSA Submission	12/11/2020

DATE	DATE
PROJECT NO.	19-6104.01
CAD DWG FILE	6104_A011.dwg
DRAWN BY	AR
CHECKED BY	EB

© COPYRIGHT ALLANA BUICK & BERS, INC. 2020

SHEET TITLE
PARTIAL SITE PLAN

SCALE: NOTED ON DRAWINGS

SHEET **A011**

DSA RESUBMISSION, 02/22/2021

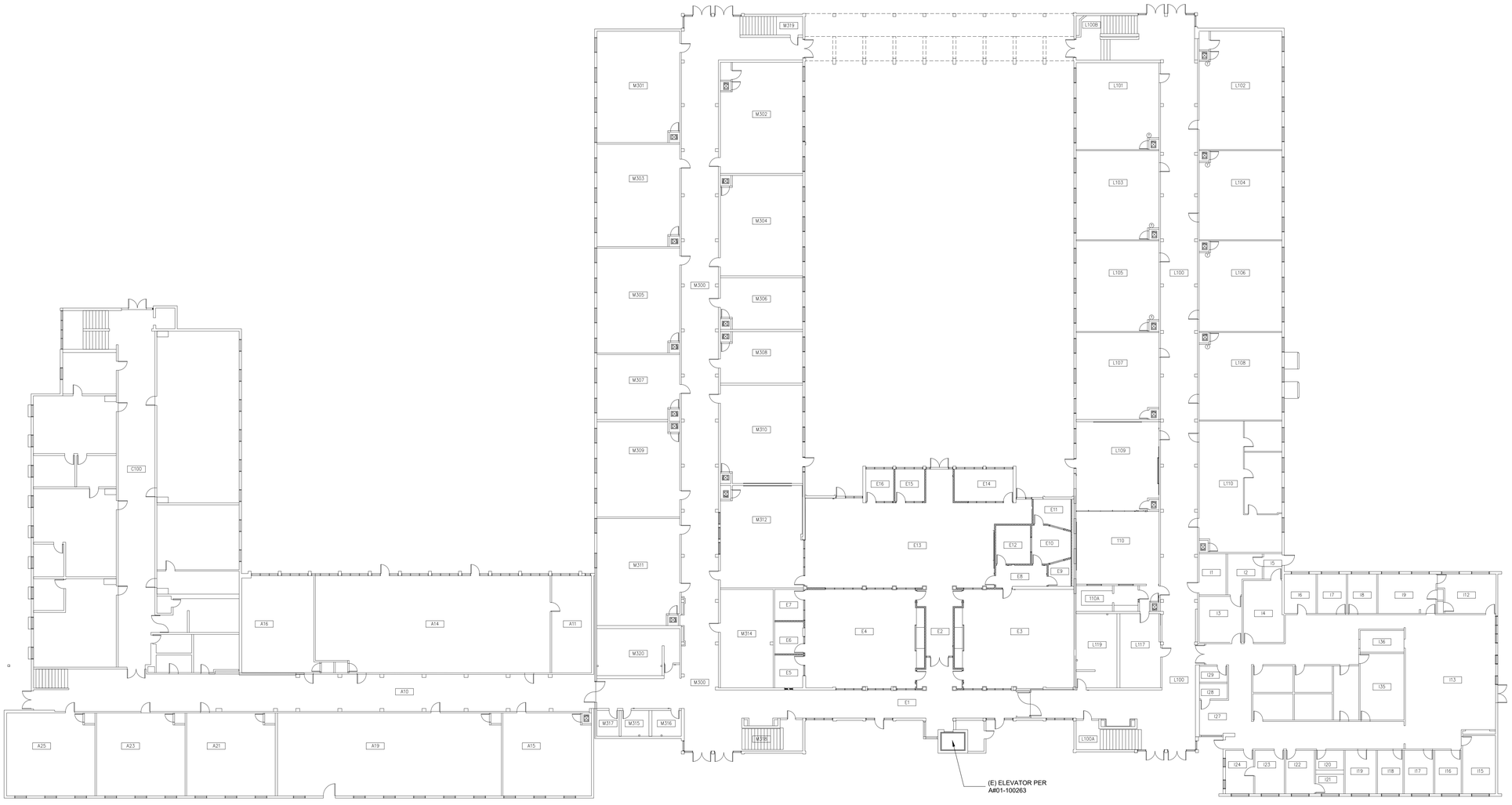

1 FIRST FLOOR PLAN

SCALE: 1/16"=1'-0"

ALLANA BUICK & BERS
Making Buildings Perform Better
990 Commercial Street, Palo Alto, CA. 94303
p 650.543.5600 - f 650.543.5625 - abbae.com

LICENSED ARCHITECT
STEPHEN LEE LIPPE
C12,273
7/31/21
STATE OF CALIFORNIA

Terra Linda High School
320 Nova Albion Way
San Rafael, CA 94903

Breezeway Waterproofing and Railing

FOR:
Greystone West
621 W Spain Street
Sonoma, CA 95476

ISSUE

Mark	Description	Date
	Bid Set	03/19/2021
	DSA Re-Submission	02/22/2021
	DSA Submission	12/11/2020

DATE	DATE
PROJECT NO.	19-6104.01
CAD DWG FILE	6104_A011.dwg
DRAWN BY	AR
CHECKED BY	EB

© COPYRIGHT ALLANA BUICK & BERS, INC. 2020

SHEET TITLE
FIRST FLOOR PLAN

SCALE: NOTED ON DRAWINGS

SHEET **A012**

DSA RESUBMISSION, 02/22/2021

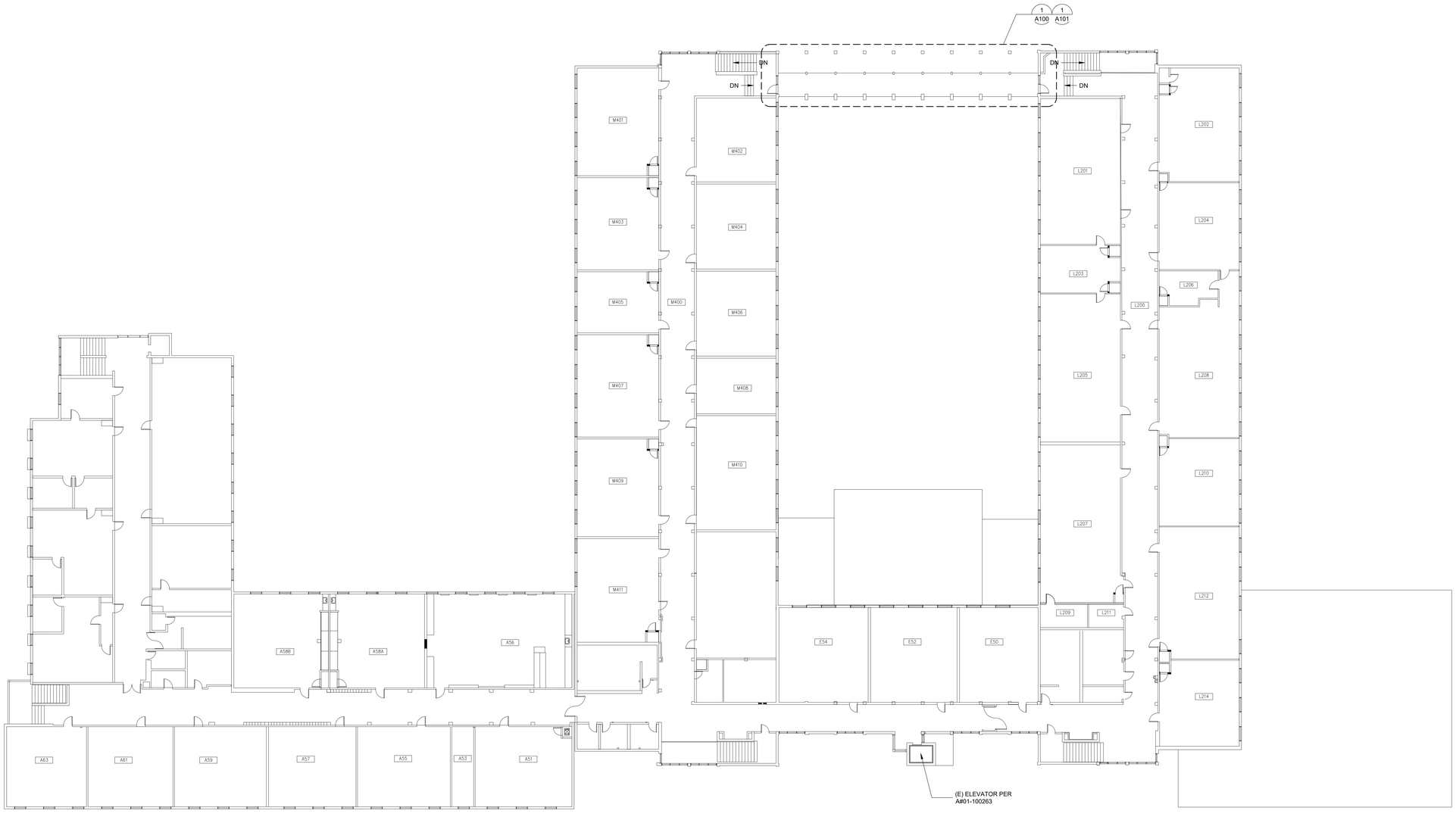

1 SECOND FLOOR PLAN

SCALE: 1/16"=1'-0"

ALLANA BUICK & BERS
Making Buildings Perform Better
990 Commercial Street, Palo Alto, CA. 94303
p 650.543.5600 - f 650.543.5625 - abbae.com

LICENSED ARCHITECT
STEPHEN LEE LIPPE
C12,273
Exp. 7/31/21
STATE OF CALIFORNIA

Terra Linda High School
320 Nova Albion Way
San Rafael, CA 94903

Breezeway Waterproofing and Railing

FOR:
Greystone West
621 W Spain Street
Sonoma, CA 95476

ISSUE		
	Bid Set	03/19/2021
	DSA Re-Submission	02/22/2021
	DSA Submission	12/11/2020
Mark	Description	Date

DATE	DATE
PROJECT NO.	19-6104.01
CAD DWG FILE	6104_A011.dwg
DRAWN BY	AR
CHECKED BY	EB

© COPYRIGHT ALLANA BUICK & BERS, INC. 2020

SHEET TITLE
SECOND FLOOR PLAN

SCALE: NOTED ON DRAWINGS

SHEET
A013

DSA RESUBMISSION, 02/22/2021

GENERAL SHEET NOTES

1. BUILDING AND SITE TO REMAIN IN USE. DO NOT BLOCK ACCESS TO SITE OR BUILDING AT ANY TIME.
2. PROTECT TRENCH DRAINS AND D.I. WITH FILTER FABRIC FROM DEBRIS GENERATED BY CONSTRUCTION ACTIVITIES FOR ALL STORM DRAINS NEAR CONSTRUCTION AREA.
3. SAFETY IS THE SOLE RESPONSIBILITY OF THE CONTRACTOR.
4. NO DEMOLITION SHALL BEGIN UNTIL PLANS INCLUDING THE DEMOLITION WORK HAVE BEEN APPROVED BY DSA.

KEY NOTES

AS NOTED WITH: #

1. REMOVE EXISTING COATING AND SLOPING MATERIALS TO BARE CONCRETE.
2. CUT (E) STEEL EVEN WITH TOP OF CONCRETE SLAB TO ALLOW FOR WALKWAY DRAINAGE OVER THE EDGE.
3. REMOVE AND DISCARD GUARDRAILS.
4. REMOVE AND DISCARD SOFFIT LIGHT FIXTURES.

LEGEND

COATING AND SLOPING DEMOLITION

ALLANA BUICK & BERS
Making Buildings Perform Better
990 Commercial Street, Palo Alto, CA. 94303
p 650.543.5600 - f 650.543.5625 - abbae.com

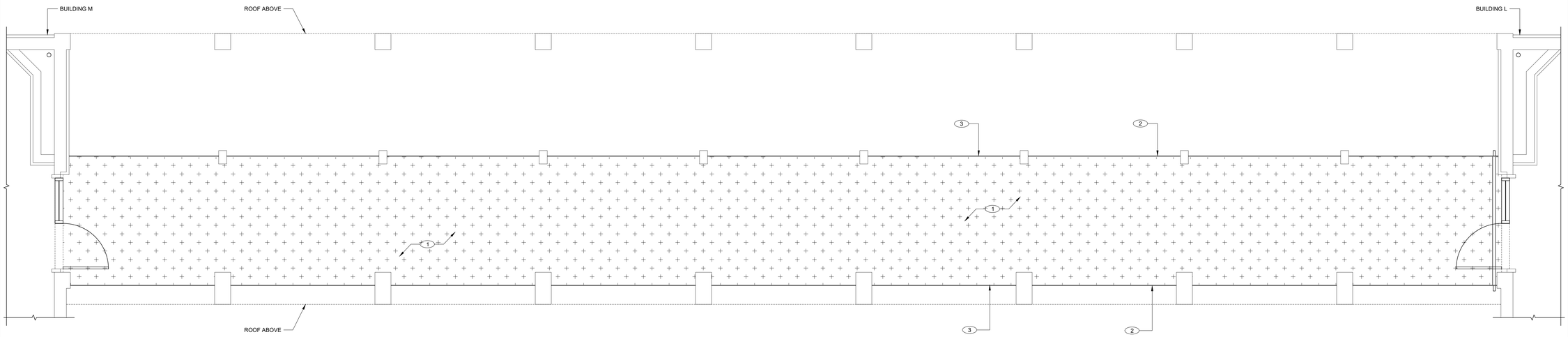

1 WALKWAY SECOND FLOOR DEMOLITION PLAN

SCALE: 3/8"=1'-0"

LICENSED ARCHITECT
STEPHEN LEE LIPPS
C12273
REGISTERED 7/31/21
STATE OF CALIFORNIA

Terra Linda High School
320 Nova Albion Way
San Rafael, CA 94903

Breezeway Waterproofing and Railing

FOR:
Greystone West
621 W Spain Street
Sonoma, CA 95476

ISSUE

Mark	Description	Date
	Bid Set	03/19/2021
	DSA Re-Submission	02/22/2021
	DSA Submission	12/11/2020

DATE	DATE
PROJECT NO.	19-6104.01
CAD DWG FILE	####_A101.dwg
DRAWN BY	AR
CHECKED BY	EB

© COPYRIGHT ALLANA BUICK & BERS, INC. 2020

SHEET TITLE
WALKWAY SECOND FLOOR DEMOLITION PLAN

SCALE: NOTED ON DRAWINGS

SHEET **A100**

DSA RESUBMISSION, 02/22/2021

1 0 2 4 6
SCALE: 3/8" = 1'-0"

1 INCH AT FULL SCALE.
IF NOT 1 INCH THIS DRAWING HAS BEEN REPRODUCED (NOT TO SCALE SHOWN)

GENERAL SHEET NOTES

1. BUILDING AND SITE TO REMAIN IN USE. DO NOT BLOCK ACCESS TO SITE OR BUILDING AT ANY TIME.
2. LANDSCAPING AND / OR SITE WORK DAMAGED BY DEMO / CONSTRUCTION OPERATIONS, CONTRACTOR EMPLOYEES, SUB-CONSULTANTS OR CONTRACTOR SUPPLIERS SHALL BE REPLACED BY CONTRACTOR AT NO COST TO OWNER OR OWNER'S REPRESENTATIVES.
3. ANY DAMAGE TO THE BUILDING EXTERIOR FINISHES, WINDOWS, DOORS, SIGNS OR APPURTANENCES SHALL BE REPAIRED BY THE CONTRACTOR AT NO EXPENSE TO THE OWNER OR OWNER'S REPRESENTATIVES.
4. ANY DAMAGE TO PAVED ROADS, WALKWAYS, OR SIDEWALKS SHALL BE REPAIRED BY THE CONTRACTOR AT NO EXPENSE TO THE OWNER OR OWNER'S REPRESENTATIVES.
5. PROTECT TRENCH DRAINS AND D.I. WITH FILTER FABRIC FROM DEBRIS GENERATED BY CONSTRUCTION ACTIVITIES FOR ALL STORM DRAINS NEAR CONSTRUCTION AREA.
6. SAFETY IS THE SOLE RESPONSIBILITY OF THE CONTRACTOR.

KEY NOTES

AS NOTED WITH: #

1. REMOVE EXISTING COATING AND SLOPING MATERIALS TO BARE CONCRETE. SHOT BLAST CONCRETE TO CSP-3. REPAIR CRACKS WIDER THAN 1/16" PER DETAIL 2/A301. APPLY SLOPING COURSE 1/4" THICK MIN. TO FORM RIDGE AND ACHIEVE SLOPE TO DRAIN, 1/4"/FT MAX. PROVIDE CRICKETS AT ALL COLUMNS . INSTALL PRIMER, BASE COAT, AND TOP COATS OF DECK COATING SYSTEM. SEE DETAIL 1/A301.
2. CUT (E) STEEL EVEN WITH TOP OF CONCRETE SLAB TO ALLOW FOR WALKWAY DRAINAGE OVER THE EDGE. INSTALL EDGE METAL PER DETAIL 5/A301.
3. AT CONCRETE WALLS AND COLUMNS, RUN COATING 4" MIN. UP AND INSTALL SURFACE-MOUNTED COUNTERFLASHING PER DETAIL 3/A301.
4. PREPARE AND PAINT (E) CONCRETE COLUMNS, BEAMS, AND SOFFITS.
5. CLEAN AND COAT ALL EXPOSED (E) STEEL.
6. INSTALL BACK ANGLE AT DOORS. SEE DETAILS 4/A301 AND 6/A301.
7. INSTALL BACK ANGLE AND FLASHING AT STOREFRONTS. SEE DETAILS 8/A301 AND 9/A301.
8. INSTALL EXPANSION JOINT PER DETAIL 4/A301.
9. REMOVE AND REPLACE (E) GUARDRAILS. SEE STRUCTURAL DRAWINGS.
10. REMOVE SOFFIT LIGHT FIXTURES. INFILL OPENINGS AND REPAIR SOFFIT SPALLS. SEE STRUCTURAL DRAWINGS

LEGEND

WALKWAY WATERPROOFING

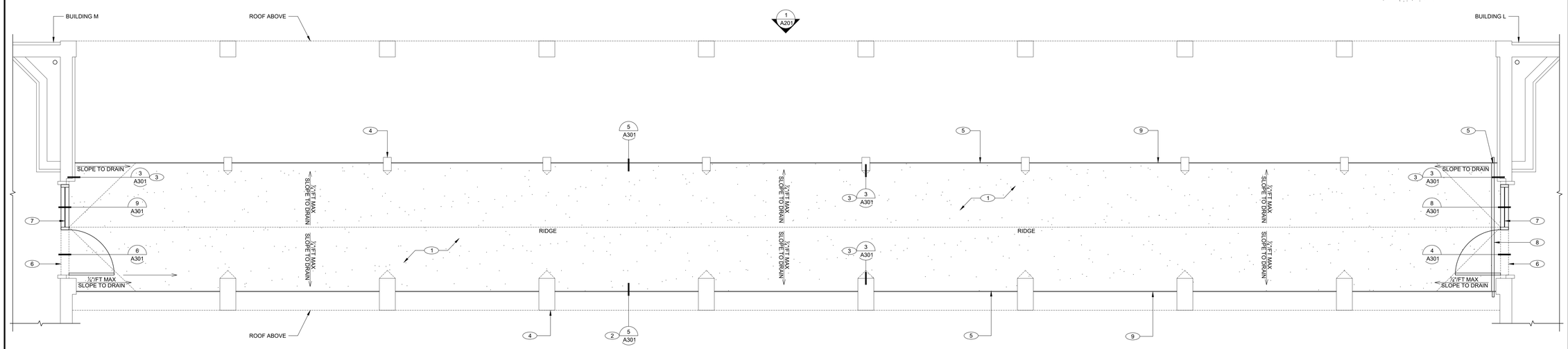

1 WALKWAY SECOND FLOOR PLAN

SCALE: 3/8"=1'-0"

SCALE: 3/8" = 1'-0"

1 INCH AT FULL SCALE
IF NOT 1 INCH THIS DRAWING HAS BEEN REPRODUCED (NOT TO SCALE SHOWN)

ALLANA BUICK & BERS
Making Buildings Perform Better
990 Commercial Street, Palo Alto, CA. 94303
p 650.543.5600 - f 650.543.5625 - abbae.com

LICENSED ARCHITECT STEPHEN LEE LIPPS C12,273 EXP. 7/31/21 STATE OF CALIFORNIA

Terra Linda High School
320 Nova Albion Way
San Rafael, CA 94903

Breezeway Waterproofing and Railing

FOR:
Greystone West
621 W Spain Street
Sonoma, CA 95476

ISSUE		
	Bid Set	03/19/2021
	DSA Re-Submission	02/22/2021
	DSA Submission	12/11/2020
Mark	Description	Date

DATE	DATE
PROJECT NO.	19-6104.01
CAD DWG FILE	#### _A101.dwg
DRAWN BY	AR
CHECKED BY	EB

© COPYRIGHT ALLANA BUICK & BERS, INC. 2020

SHEET TITLE
WALKWAY SECOND FLOOR PLAN

SCALE: NOTED ON DRAWINGS

SHEET **A101**

DSA RESUBMISSION, 02/22/2021

GENERAL SHEET NOTES

1. BUILDING AND SITE TO REMAIN IN USE. DO NOT BLOCK ACCESS TO SITE OR BUILDING AT ANY TIME.
2. LANDSCAPING AND / OR SITE WORK DAMAGED BY DEMO / CONSTRUCTION OPERATIONS, CONTRACTOR EMPLOYEES, SUB-CONSULTANTS OR CONTRACTOR SUPPLIERS SHALL BE REPLACED BY CONTRACTOR AT NO COST TO OWNER OR OWNER'S REPRESENTATIVES.
3. ANY DAMAGE TO THE BUILDING EXTERIOR FINISHES, WINDOWS, DOORS, SIGNS OR APPURTANENCES SHALL BE REPAIRED BY THE CONTRACTOR AT NO EXPENSE TO THE OWNER OR OWNER'S REPRESENTATIVES.
4. ANY DAMAGE TO PAVED ROADS, WALKWAYS, OR SIDEWALKS SHALL BE REPAIRED BY THE CONTRACTOR AT NO EXPENSE TO THE OWNER OR OWNER'S REPRESENTATIVES.
5. PROTECT TRENCH DRAINS AND D.I. WITH FILTER FABRIC FROM DEBRIS GENERATED BY CONSTRUCTION ACTIVITIES FOR ALL STORM DRAINS NEAR CONSTRUCTION AREA.
6. SAFETY IS THE SOLE RESPONSIBILITY OF THE CONTRACTOR.

KEY NOTES

AS NOTED WITH: #

1. REMOVE EXISTING COATING AND SLOPING MATERIALS TO BARE CONCRETE. SHOT BLAST CONCRETE TO CSP-3. REPAIR CRACKS WIDER THAN 1/16" PER DETAIL 2/A301. APPLY SLOPING COURSE 1/4" THICK MIN. TO FORM RIDGE AND ACHIEVE SLOPE TO DRAIN, 1/4"/FT MAX. PROVIDE CRICKETS AT ALL COLUMNS . INSTALL PRIMER, BASE COAT, AND TOP COATS OF DECK COATING SYSTEM. SEE DETAIL 1/A301.
2. CUT (E) STEEL EVEN WITH TOP OF CONCRETE SLAB TO ALLOW FOR WALKWAY DRAINAGE OVER THE EDGE. INSTALL EDGE METAL PER DETAIL 5/A301.
3. AT CONCRETE WALLS AND COLUMNS, RUN COATING 4" MIN. UP AND INSTALL SURFACE-MOUNTED COUNTERFLASHING PER DETAIL 3/A301.
4. PREPARE AND PAINT (E) CONCRETE COLUMNS, BEAMS, AND SOFFITS.
5. CLEAN AND COAT ALL EXPOSED (E) STEEL.
6. INSTALL BACK ANGLE AT DOORS. SEE DETAILS 4/A301 AND 6/A301.
7. INSTALL BACK ANGLE AND FLASHING AT STOREFRONTS. SEE DETAILS 8/A301 AND 9/A301.
8. INSTALL EXPANSION JOINT PER DETAIL 4/A301.
9. REMOVE AND REPLACE (E) GUARDRAILS. SEE STRUCTURAL DRAWINGS.
10. REMOVE SOFFIT LIGHT FIXTURES. INFILL OPENINGS AND REPAIR SOFFIT SPALLS. SEE STRUCTURAL DRAWINGS

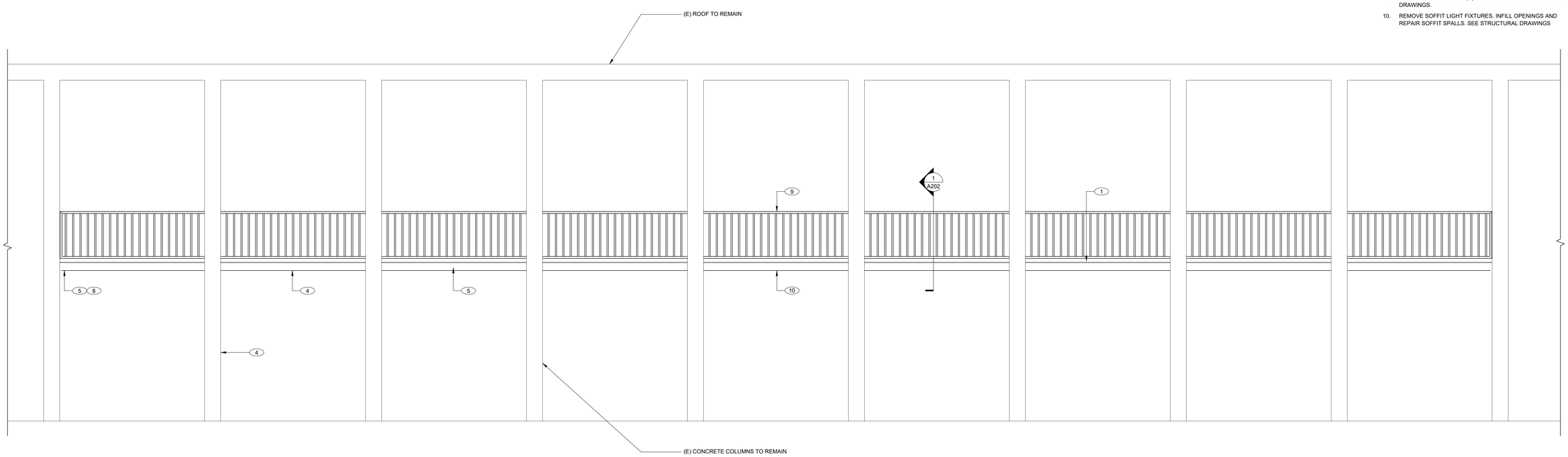

1 WALKWAY NORTH ELEVATION

SCALE: 3/8"=1'-0"

1 0 2 4 6

SCALE: 3/8" = 1'-0"

1 INCH AT FULL SCALE
IF NOT 1 INCH THIS DRAWING HAS BEEN REPRODUCED (NOT TO SCALE SHOWN)

ALLANA BUICK & BERS
Making Buildings Perform Better
990 Commercial Street, Palo Alto, CA. 94303
p 650.543.5600 - f 650.543.5625 - abbae.com

LICENSED ARCHITECT
STEPHEN LEE LIPPE
C12,273
7/31/21
STATE OF CALIFORNIA

Terra Linda High School
320 Nova Albion Way
San Rafael, CA 94903

Breezeway Waterproofing and Railing

FOR:
Greystone West
621 W Spain Street
Sonoma, CA 95476

ISSUE		
	Bid Set	03/19/2021
	DSA Re-Submission	02/22/2021
	DSA Submission	12/11/2020
Mark	Description	Date

DATE	DATE
PROJECT NO.	19-6104.01
CAD DWG FILE	6104_A201.dwg
DRAWN BY	AR
CHECKED BY	EB

© COPYRIGHT ALLANA BUICK & BERS, INC. 2020

SHEET TITLE
WALKWAY NORTH ELEVATION

SCALE: NOTED ON DRAWINGS

SHEET **A201**

DSA RESUBMISSION, 02/22/2021

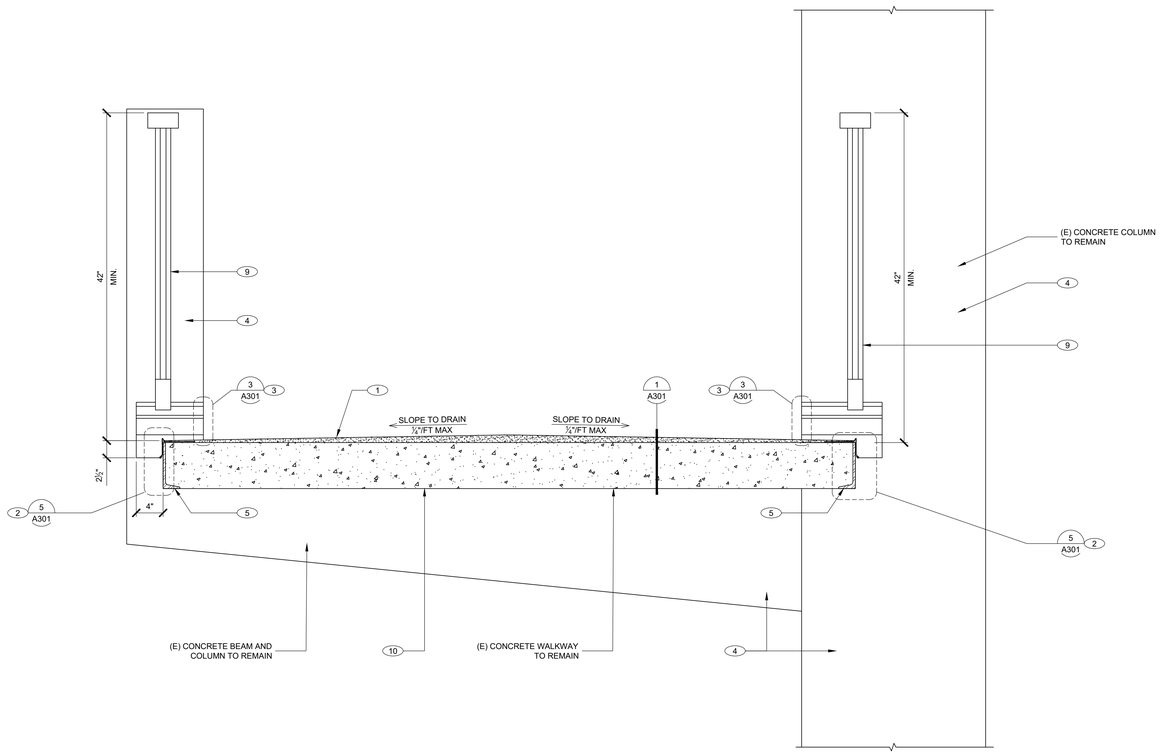

1 WALKWAY SECTION

SCALE: 1-1/2"=1'-0"

GENERAL SHEET NOTES

1. BUILDING AND SITE TO REMAIN IN USE. DO NOT BLOCK ACCESS TO SITE OR BUILDING AT ANY TIME.
2. LANDSCAPING AND / OR SITE WORK DAMAGED BY DEMO / CONSTRUCTION OPERATIONS, CONTRACTOR EMPLOYEES, SUB-CONSULTANTS OR CONTRACTOR SUPPLIERS SHALL BE REPLACED BY CONTRACTOR AT NO COST TO OWNER OR OWNER'S REPRESENTATIVES.
3. ANY DAMAGE TO THE BUILDING EXTERIOR FINISHES, WINDOWS, DOORS, SIGNS OR APPURTANENCES SHALL BE REPAIRED BY THE CONTRACTOR AT NO EXPENSE TO THE OWNER OR OWNER'S REPRESENTATIVES.
4. ANY DAMAGE TO PAVED ROADS, WALKWAYS, OR SIDEWALKS SHALL BE REPAIRED BY THE CONTRACTOR AT NO EXPENSE TO THE OWNER OR OWNER'S REPRESENTATIVES.
5. PROTECT TRENCH DRAINS AND D.I. WITH FILTER FABRIC FROM DEBRIS GENERATED BY CONSTRUCTION ACTIVITIES FOR ALL STORM DRAINS NEAR CONSTRUCTION AREA.
6. SAFETY IS THE SOLE RESPONSIBILITY OF THE CONTRACTOR.

KEY NOTES

AS NOTED WITH: #

1. REMOVE EXISTING COATING AND SLOPING MATERIALS TO BARE CONCRETE. SHOT BLAST CONCRETE TO CSP-3. REPAIR CRACKS WIDER THAN 1/16" PER DETAIL 2/A301. APPLY SLOPING COURSE 1/4" THICK MIN. TO FORM RIDGE AND ACHIEVE SLOPE TO DRAIN, ¼"/FT MAX. PROVIDE CRICKETS AT ALL COLUMNS . INSTALL PRIMER, BASE COAT, AND TOP COATS OF DECK COATING SYSTEM. SEE DETAIL 1/A301.
2. CUT (E) STEEL EVEN WITH TOP OF CONCRETE SLAB TO ALLOW FOR WALKWAY DRAINAGE OVER THE EDGE. INSTALL EDGE METAL PER DETAIL 5/A301.
3. AT CONCRETE WALLS AND COLUMNS, RUN COATING 4" MIN. UP AND INSTALL SURFACE-MOUNTED COUNTERFLASHING PER DETAIL 3/A301.
4. PREPARE AND PAINT (E) CONCRETE COLUMNS, BEAMS, AND SOFFITS.
5. CLEAN AND COAT ALL EXPOSED (E) STEEL.
6. INSTALL BACK ANGLE AT DOORS. SEE DETAILS 4/A301 AND 6/A301.
7. INSTALL BACK ANGLE AND FLASHING AT STOREFRONTS. SEE DETAILS 8/A301 AND 9/A301.
8. INSTALL EXPANSION JOINT PER DETAIL 4/A301.
9. REMOVE AND REPLACE (E) GUARDRAILS. SEE STRUCTURAL DRAWINGS.
10. REMOVE SOFFIT LIGHT FIXTURES. INFILL OPENINGS AND REPAIR SOFFIT SPALLS. SEE STRUCTURAL DRAWINGS

ALLANA BUICK & BERS
Making Buildings Perform Better
990 Commercial Street, Palo Alto, CA. 94303
p 650.543.5600 - f 650.543.5625 - abbae.com

LICENSED ARCHITECT
STEPHEN LEE LIPPE
C12,273
7/31/21
STATE OF CALIFORNIA

Terra Linda High School
320 Nova Albion Way
San Rafael, CA 94903

Breezeway Waterproofing and Railing

FOR:
Greystone West
621 W Spain Street
Sonoma, CA 95476

ISSUE		
	Bid Set	03/19/2021
	DSA Re-Submission	02/22/2021
	DSA Submission	12/11/2020
Mark	Description	Date

DATE	DATE
PROJECT NO.	19-6104.01
CAD DWG FILE	6104_A201.dwg
DRAWN BY	AR
CHECKED BY	EB

© COPYRIGHT ALLANA BUICK & BERS, INC. 2020

DSA RESUBMISSION, 02/22/2021

SHEET TITLE
WALKWAY SECTION

SCALE: NOTED ON DRAWINGS

SHEET **A202**

1 0 1FT
SCALE: 1 1/2" = 1'-0"

1 INCH AT FULL SCALE.
IF NOT 1 INCH THIS DRAWING HAS BEEN REPRODUCED (NOT TO SCALE SHOWN)

FASTENER SCHEDULE					
	MANUFACTURER	TYPE	MATERIAL	LENGTH / EMBED DEPTH	SPACING
TYPE 1	DEWALT	ZAMAC NAILIN DRIVE PIN ANCHOR	ZAMAC ALLOY ANCHOR BODY, S.S. DRIVE PIN	1-1/4" MIN. EMBED.	PER DETAIL
TYPE 2	TEK	#10 PHILLIPS FLAT HEAD SELF DRILLING	S.S.	1-1/4"	PER DETAIL
TYPE 3	TEK	#10 PAN HEAD SELF DRILLING	S.S.	1-1/4"	PER DETAIL
TYPE 4	RED HEAD	TRUBOLT WEDGE ANCHOR	S.S.	1-1/2"	PER DSA PROJECT # 01-118754

FASTENER SCHEDULE
13 / A301

SCALE: 6" = 12" NOTE: SOME ASSEMBLIES EXPLODED FOR CLARITY. DO NOT SCALE DETAILS.

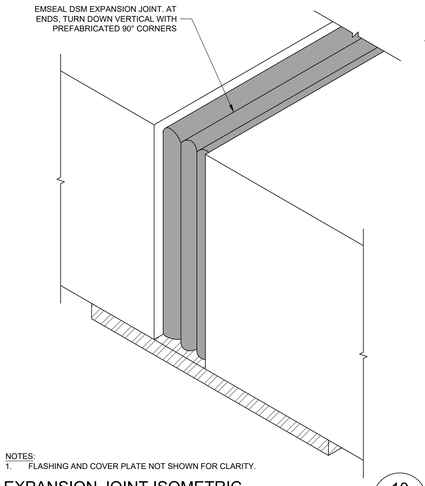

NOTES:
1. FLASHING AND COVER PLATE NOT SHOWN FOR CLARITY.

EXPANSION JOINT ISOMETRIC
10 / A301

SCALE: 6" = 12" NOTE: SOME ASSEMBLIES EXPLODED FOR CLARITY. DO NOT SCALE DETAILS.

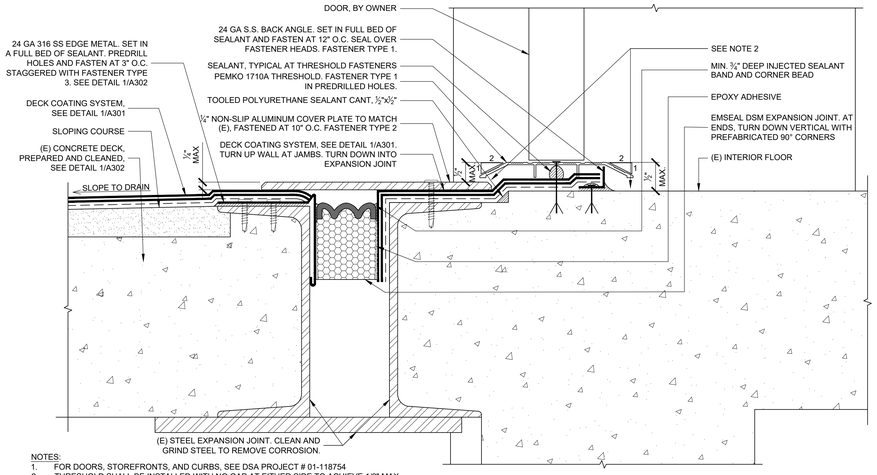

NOTES:
1. FOR DOORS, STOREFRONTS, AND CURBS, SEE DSA PROJECT # 01-118754
2. THRESHOLD SHALL BE INSTALLED WITH NO GAP AT EITHER SIDE TO ACHIEVE 1/2" MAX. THRESHOLD HEIGHT. DRAWING IS EXPLODED FOR CLARITY.

EAST DOOR SILL AND EXPANSION JOINT
4 / A301

SCALE: 6" = 12" NOTE: SOME ASSEMBLIES EXPLODED FOR CLARITY. DO NOT SCALE DETAILS.

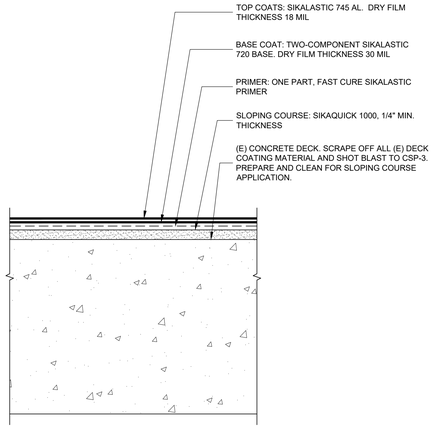

TYPICAL DECK COATING SYSTEM
1 / A301

SCALE: 6" = 12" NOTE: SOME ASSEMBLIES EXPLODED FOR CLARITY. DO NOT SCALE DETAILS.

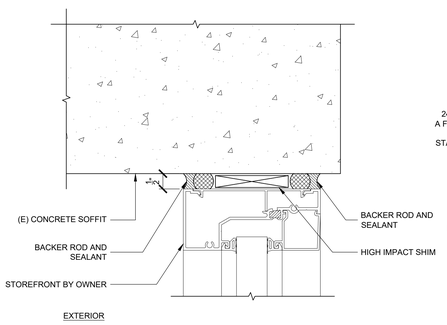

STOREFRONT HEAD
1 / 14 / A301

SCALE: 6" = 12" NOTE: SOME ASSEMBLIES EXPLODED FOR CLARITY. DO NOT SCALE DETAILS.

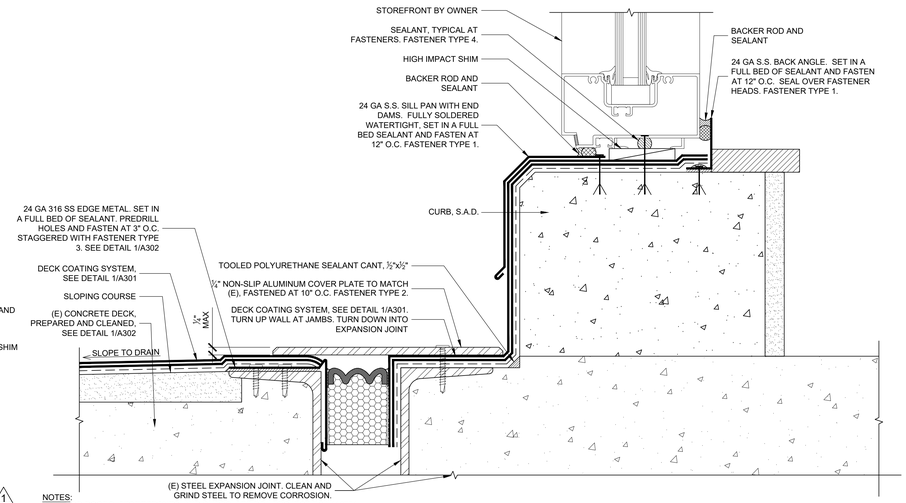

NOTES:
1. FOR DOORS, STOREFRONTS, AND CURBS, SEE DSA PROJECT # 01-118754

EAST STOREFRONT SILL AND EXPANSION JOINT
8 / A301

SCALE: 6" = 12" NOTE: SOME ASSEMBLIES EXPLODED FOR CLARITY. DO NOT SCALE DETAILS.

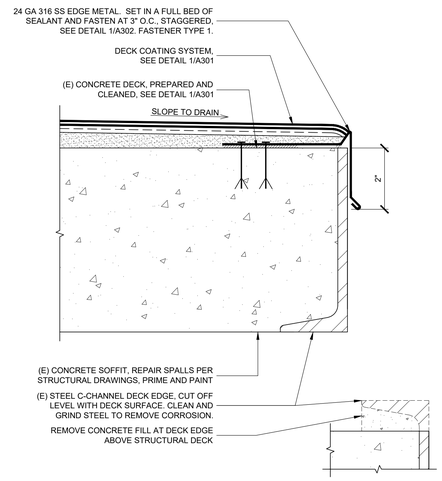

DECK EDGE
5 / A301

SCALE: 6" = 12" NOTE: SOME ASSEMBLIES EXPLODED FOR CLARITY. DO NOT SCALE DETAILS.

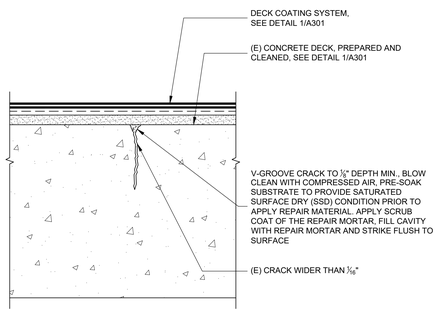

TYPICAL CRACK WIDER THAN 1/16"
2 / A301

SCALE: 6" = 12" NOTE: SOME ASSEMBLIES EXPLODED FOR CLARITY. DO NOT SCALE DETAILS.

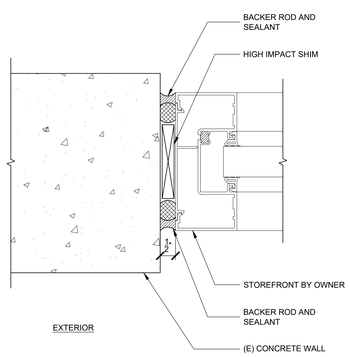

STOREFRONT JAMB
1 / 13 / A301

SCALE: 6" = 12" NOTE: SOME ASSEMBLIES EXPLODED FOR CLARITY. DO NOT SCALE DETAILS.

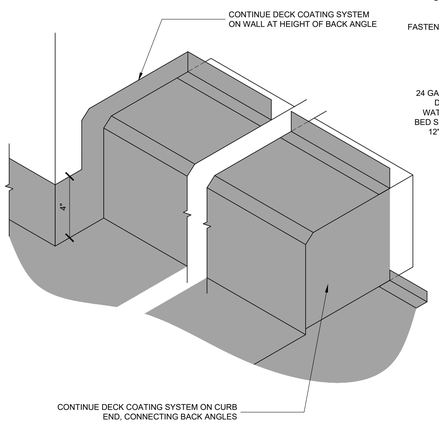

CURB ISOMETRIC
12 / A301

SCALE: 3" = 12" NOTE: SOME ASSEMBLIES EXPLODED FOR CLARITY. DO NOT SCALE DETAILS.

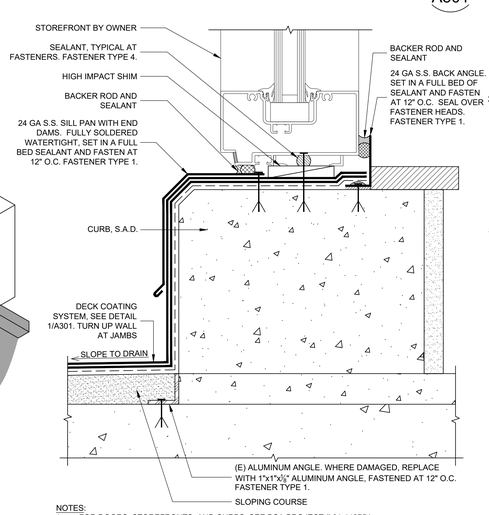

NOTES:
1. FOR DOORS, STOREFRONTS, AND CURBS, SEE DSA PROJECT # 01-118754

WEST STOREFRONT SILL
9 / A301

SCALE: 3" = 12" NOTE: SOME ASSEMBLIES EXPLODED FOR CLARITY. DO NOT SCALE DETAILS.

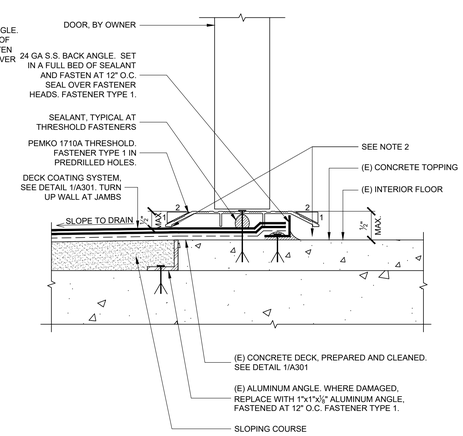

NOTES:
1. FOR DOORS, STOREFRONTS, AND CURBS, SEE DSA PROJECT # 01-118754
2. THRESHOLD SHALL BE INSTALLED WITH NO GAP AT EITHER SIDE TO ACHIEVE 1/2" MAX. THRESHOLD HEIGHT. DRAWING IS EXPLODED FOR CLARITY.

WEST DOOR SILL
6 / A301

SCALE: 3" = 12" NOTE: SOME ASSEMBLIES EXPLODED FOR CLARITY. DO NOT SCALE DETAILS.

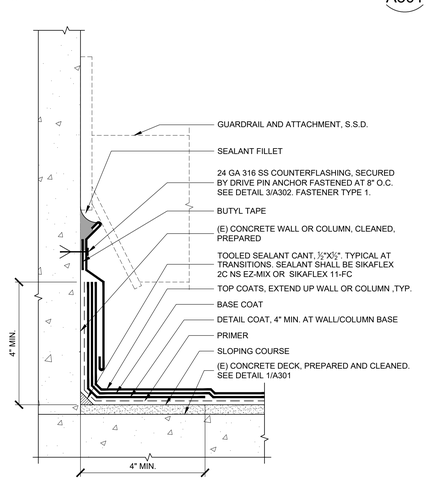

BASE OF CONCRETE WALL OR COLUMN
3 / A301

SCALE: 6" = 12" NOTE: SOME ASSEMBLIES EXPLODED FOR CLARITY. DO NOT SCALE DETAILS.

ALLANA BUICK & BERS
Making Buildings Perform Better
990 Commercial Street, Palo Alto, CA. 94303
p 650.543.5600 - f 650.543.5625 - abbae.com

LICENSED ARCHITECT STEPHEN LEE LIPPE C12,273 7/31/21 STATE OF CALIFORNIA

Terra Linda High School
320 Nova Albion Way
San Rafael, CA 94903

Breezeway Waterproofing and Railing

FOR:
Greystone West
621 W Spain Street
Sonoma, CA 95476

ISSUE		
1	Bid Set	03/19/2021
	DSA Re-Submission	02/22/2021
	DSA Submission	12/11/2020
Mark	Description	Date

DATE	DATE
PROJECT NO.	19-6104.01
CAD DWG FILE	6104_A301.dwg
DRAWN BY	AR
CHECKED BY	EB

© COPYRIGHT ALLANA BUICK & BERS, INC. 2020

SHEET TITLE
DECK COATING DETAILS

SCALE: NOTED ON DRAWINGS

SHEET **A301**

DSA RESUBMISSION, 02/22/2021

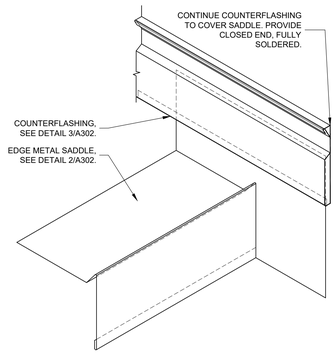

NOTES:
1. FIELD VERIFY DIMENSIONS, CONDITIONS AND COORDINATION / FIT OF COMPONENTS.
2. SEPARATE DISSIMILAR METALS AND FASTEN WITH NON-MAGNETIC (PASSIVE) S.S. FASTENERS WHERE OCCURS.
3. SHEET METAL SURFACES TO BE EMBEDDED IN WATERPROOFING MEMBRANE SHALL BE ROUGHENED UP, CLEAN AND DRY WHEN APPLYING WATERPROOFING, TYPICAL.

DECK EDGE SADDLE AT WALL

4 / A302

SCALE: 3" = 12" NOTE: SOME ASSEMBLIES EXPLODED FOR CLARITY. DO NOT SCALE DETAILS.

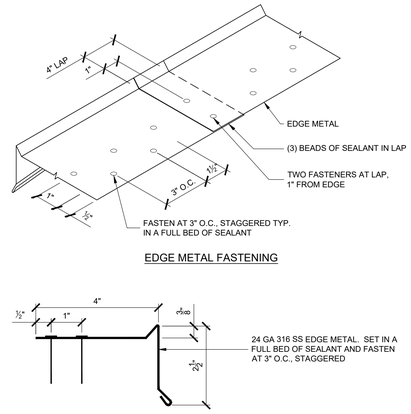

TYPICAL DECK EDGE METAL

NOTES:
1. FIELD VERIFY DIMENSIONS, CONDITIONS AND COORDINATION / FIT OF COMPONENTS.
2. SEPARATE DISSIMILAR METALS AND FASTEN WITH NON-MAGNETIC (PASSIVE) S.S. FASTENERS WHERE OCCURS.
3. SHEET METAL SURFACES TO BE EMBEDDED IN WATERPROOFING MEMBRANE SHALL BE ROUGHENED UP, CLEAN AND DRY WHEN APPLYING WATERPROOFING, TYPICAL
4. SEE DETAILS ON A301 FOR FASTENER TYPES.

DECK EDGE METAL FABRICATION

1 / A302

SCALE: 6" = 12" NOTE: SOME ASSEMBLIES EXPLODED FOR CLARITY. DO NOT SCALE DETAILS.

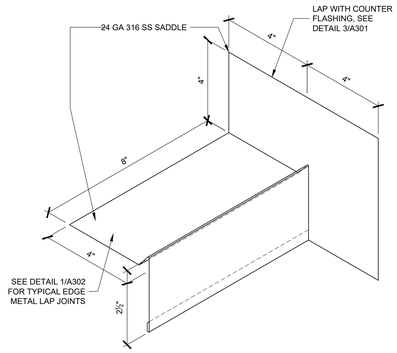

NOTES:
1. FIELD VERIFY DIMENSIONS, CONDITIONS AND COORDINATION / FIT OF COMPONENTS.
2. SEPARATE DISSIMILAR METALS AND FASTEN WITH NON-MAGNETIC (PASSIVE) S.S. FASTENERS WHERE OCCURS.
3. SHEET METAL SURFACES TO BE EMBEDDED IN WATERPROOFING MEMBRANE SHALL BE ROUGHENED UP, CLEAN AND DRY WHEN APPLYING WATERPROOFING, TYPICAL.

DECK EDGE SADDLE AT WALL

2 / A302

SCALE: 3" = 12" NOTE: SOME ASSEMBLIES EXPLODED FOR CLARITY. DO NOT SCALE DETAILS.

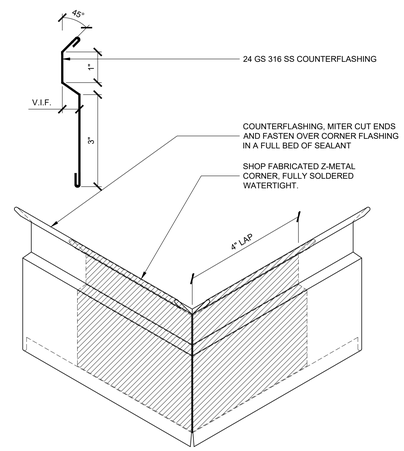

NOTES:
1. FIELD VERIFY DIMENSIONS, CONDITIONS AND COORDINATION / FIT OF COMPONENTS.
2. SEPARATE DISSIMILAR METALS AND FASTEN WITH NON-MAGNETIC (PASSIVE) S.S. FASTENERS WHERE OCCURS.

COUNTERFLASHING FABRICATION

3 / A302

SCALE: 6" = 12" NOTE: SOME ASSEMBLIES EXPLODED FOR CLARITY. DO NOT SCALE DETAILS.

ALLANA BUICK & BERS
Making Buildings Perform Better
990 Commercial Street, Palo Alto, CA. 94303
p 650.543.5600 - f 650.543.5625 - abbae.com

LICENSED ARCHITECT STEPHEN LEE LIPPE C12,273 7/31/21 STATE OF CALIFORNIA

Terra Linda High School
320 Nova Albion Way
San Rafael, CA 94903

Breezeway Waterproofing and Railing

FOR:
Greystone West
621 W Spain Street
Sonoma, CA 95476

ISSUE		
	Bid Set	03/19/2021
	DSA Re-Submission	02/22/2021
	DSA Submission	12/11/2020
Mark	Description	Date

DATE	DATE
PROJECT NO.	19-6104.01
CAD DWG FILE	6104_A301.dwg
DRAWN BY	AR
CHECKED BY	EB

© COPYRIGHT ALLANA BUICK & BERS, INC. 2020

DSA RESUBMISSION, 02/22/2021

SHEET TITLE
DECK COATING DETAILS

SCALE: NOTED ON DRAWINGS

SHEET **A302**

PHOTO 10 A401

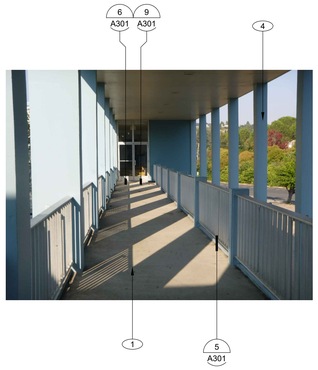

PHOTO 7 A401

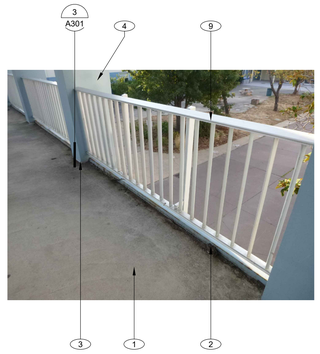

PHOTO 4 A401

KEY NOTES

AS NOTED WITH: #

1. REMOVE EXISTING COATING AND SLOPING MATERIALS TO BARE CONCRETE. SHOT BLAST CONCRETE TO CSP-3. REPAIR CRACKS WIDER THAN 1/16" PER DETAIL 2/A301. APPLY SLOPING COURSE 1/4" THICK MIN. TO FORM RIDGE AND ACHIEVE SLOPE TO DRAIN, 1/4"/FT MAX. PROVIDE CRICKETS AT ALL COLUMNS. INSTALL PRIMER, BASE COAT, AND TOP COATS OF DECK COATING SYSTEM. SEE DETAIL 1/A301.
2. CUT (E) STEEL EVEN WITH TOP OF CONCRETE SLAB TO ALLOW FOR WALKWAY DRAINAGE OVER THE EDGE. INSTALL EDGE METAL PER DETAIL 5/A301.
3. AT CONCRETE WALLS AND COLUMNS, RUN COATING 4" MIN. UP AND INSTALL SURFACE-MOUNTED COUNTERFLASHING PER DETAIL 3/A301.
4. PREPARE AND PAINT (E) CONCRETE COLUMNS, BEAMS, AND SOFFITS.
5. CLEAN AND COAT ALL EXPOSED (E) STEEL.
6. INSTALL BACK ANGLE AT DOORS. SEE DETAILS 4/A301 AND 6/A301.
7. INSTALL BACK ANGLE AND FLASHING AT STOREFRONTS. SEE DETAILS 8/A301 AND 9/A301.
8. INSTALL EXPANSION JOINT PER DETAIL 4/A301.
9. REMOVE AND REPLACE (E) GUARDRAILS. SEE STRUCTURAL DRAWINGS.
10. REMOVE SOFFIT LIGHT FIXTURES. INFILL OPENINGS AND REPAIR SOFFIT SPALLS. SEE STRUCTURAL DRAWINGS

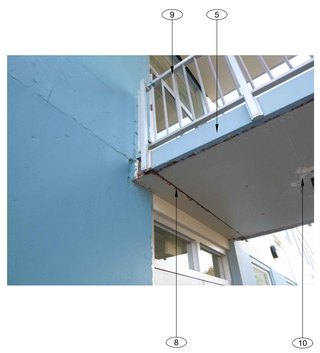

PHOTO 11 A401

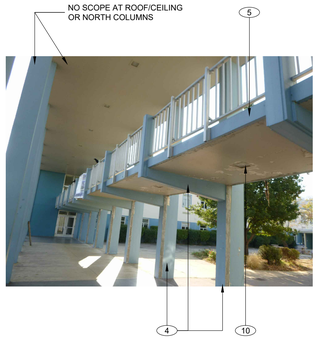

PHOTO 8 A401

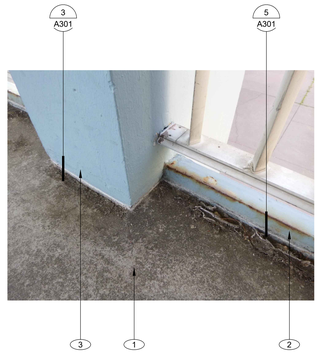

PHOTO 5 A401

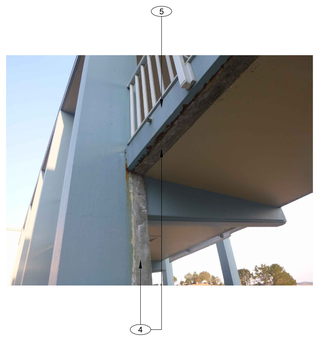

PHOTO 2 A401

PHOTO 9 A401

PHOTO 6 A401

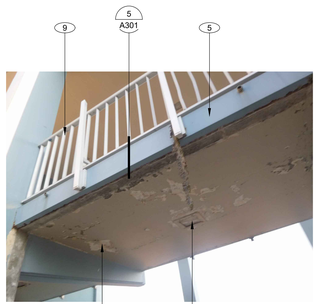

PHOTO 3 A401

ALLANA BUICK & BERS
Making Buildings Perform Better
990 Commercial Street, Palo Alto, CA. 94303
p 650.543.5600 - f 650.543.5625 - abbae.com

LICENSED ARCHITECT STEPHEN LEE LIPPE C12,273 EXP. 7/31/21 STATE OF CALIFORNIA

Terra Linda High School
320 Nova Albion Way
San Rafael, CA 94903

Breezeway Waterproofing and Railing

FOR:
Greystone West
621 W Spain Street
Sonoma, CA 95476

ISSUE		
	Bid Set	03/19/2021
	DSA Re-Submission	02/22/2021
	DSA Submission	12/11/2020
Mark	Description	Date

DATE	DATE
PROJECT NO.	19-6104.01
CAD DWG FILE	6104_A401.dwg
DRAWN BY	AR
CHECKED BY	EB

© COPYRIGHT ALLANA BUICK & BERS, INC. 2020

SHEET TITLE
PHOTOS

SCALE: NOTED ON DRAWINGS

SHEET **A401**

DSA RESUBMISSION, 02/22/2021

STATEMENT OF SPECIAL INSPECTIONS

11 - POST INSTALLED ANCHORS

Verification and Inspection	Continuous	Periodic
a. Inspection of anchors post-installed in concrete (per manufacturer's installation instructions)		
b. Mechanical anchors and other adhesive anchors	--	X

Post Installed Anchor Inspections and Testing

1. For Periodic Inspections, Special Inspector to observe initial installation of each anchor combination (diameter, anchor material, and epoxy material) and at least 25% of subsequent installations.
2. Epoxy Anchors
   a. Document anchor description and type
   b. Record epoxy name and expiration date
   c. Verify hole location, diameter, depth, and anchor rod material
   d. Observe hole cleaning procedure and confirm cleanliness
   e. Observe installation of epoxy and anchor

17 - STRUCTURAL STEEL

Verification and Inspection	Continuous	Periodic
a. Verify identification of all materials:		
- Materials conform to the approved specifications	--	X
- Mill certificates	--	X
b. Verify and document fabrication per DSA approved construction documents.	--	X

19 - WELDING

Verification and Inspection	Continuous	Periodic
Verification of Materials, Equipment, Welders, etc:		
a. Verify weld filler material identification markings	--	X
b. Verify weld filler material manufacturer's certificate of compliance	--	X
c. Verify WPS, welder qualifications, and equipment	--	X
Shop Welding:		
b. Inspect single pass fillet welds ≤ 5/16"	--	X
c. Inspect welding of stair and railing systems	--	X

STRUCTURAL GENERAL NOTES

DIVISION 1 = GENERAL CONDITIONS

SECTION 1-A GENERAL REQUIREMENTS:

1. THESE NOTES SHALL APPLY TO ALL DRAWINGS AND GOVERN UNLESS OTHERWISE NOTED.
2. THESE STRUCTURAL DRAWINGS ARE COPYRIGHTED INSTRUMENTS OF SERVICE OF ALLANA BUICK & BERS, INC. (ABB) FOR SOLE USE OF THIS PROJECT.
3. DO NOT SCALE DRAWINGS.
4. INSTALL, TEST, AND INSPECT MANUFACTURED STRUCTURAL PRODUCTS IN ACCORDANCE WITH MANUFACTURER'S RECOMMENDATIONS AND APPLICABLE EVALUATION SERVICE REPORTS.

SECTION 1-B ENGINEER'S STATUS:

THE ENGINEER DOES NOT GUARANTEE THE CONTRACTOR'S PERFORMANCE, AND NO PROVISIONS OF THE CONTRACT DOCUMENTS SHALL RELIEVE THE CONTRACTOR FROM ANY LIABILITY DUE TO NEGLIGENCE, INCOMPETENCE OR ERRORS OF OMISSIONS OR COMMISSION OF THE CONTRACTOR.

ALLANA BUICK & BERS, INC. IS THE STRUCTURAL ENGINEER OF RECORD (SEOR) FOR THIS PROJECT. ALL DESIGN WORK HAS BEEN PREPARED UNDER OUR DIRECTION AND SUPERVISION.

SECTION 1-C CODES:

ALL CODES HAVING JURISDICTION SHALL BE OBSERVED STRICTLY IN THE CONSTRUCTION OF THE PROJECT, INCLUDING ALL APPLICABLE STATE, GOVERNING AGENCY AND COUNTY BUILDING, ZONING, ELECTRICAL, AND FIRE CODES. CONTRACTOR SHALL VERIFY ALL CODE REQUIREMENTS BEFORE COMMENCEMENT OF CONSTRUCTION AND BRING ANY DISCREPANCIES BETWEEN CODE REQUIREMENTS AND THE CONSTRUCTION DOCUMENTS TO THE ATTENTION OF THE ENGINEER.

SECTION 1-D ERRORS AND OMISSIONS:

ERRORS AND OMISSIONS WHICH MAY OCCUR IN CONTRACT DOCUMENTS SHALL BE BROUGHT TO THE ATTENTION OF THE ENGINEER IN WRITING AND WRITTEN INSTRUCTIONS SHALL BE OBTAINED BEFORE PROCEEDING WITH THE WORK. THE CONTRACTOR WILL BE HELD RESPONSIBLE FOR THE RESULTS OF ANY ERRORS, DISCREPANCIES, OR OMISSIONS WHICH THE CONTRACTOR FAILED TO NOTIFY THE ENGINEER OF BEFORE CONSTRUCTION AND/OR FABRICATION OF THE WORK.

SECTION 1-E JOB CONDITIONS:

THE CONTRACTOR AND SUBCONTRACTOR SHALL VERIFY ALL DIMENSIONS AND JOB CONDITIONS AT THE JOB SITE SUFFICIENTLY IN ADVANCE OF WORK TO BE PERFORMED TO ASSURE THE ORDERLY PROGRESS OF THE WORK. THE CONTRACTOR SHALL BE RESPONSIBLE FOR ASSURING THAT EACH SUBCONTRACTOR PERFORMS THE WORK IN ACCORDANCE WITH ALL CODES IN A TIMELY MANNER TO ASSURE COORDINATION WITH OTHER SUBCONTRACTORS.

THE DESIGN, ADEQUACY AND SAFETY OF ERECTION BRACING, SHORING, TEMPORARY SUPPORTS, ETC., ARE THE SOLE RESPONSIBILITY OF THE CONTRACTOR.

JOB SITE SAFETY IS THE SOLE RESPONSIBILITY OF THE CONTRACTOR. CONTRACTOR SHALL BE RESPONSIBLE FOR CONFORMANCE WITH CALIFORNIA DIVISION OF OCCUPATIONAL SAFETY AND HEATH (CAL/OSHA) REQUIREMENTS.

IT SHALL BE THE RESPONSIBILITY OF THE CONTRACTOR TO LOCATE ALL EXISTING UTILITIES WHETHER SHOWN HEREON OR NOT AND TO PROTECT THEM FROM DAMAGE. THE CONTRACTOR SHALL BEAR ALL EXPENSE OF REPAIR OR REPLACEMENT IN CONJUNCTION WITH THE EXECUTION OF THIS WORK.

SECTION 1-G SUBMITTALS:

1. SHOP DRAWINGS, PRODUCT DATA, AND DESIGN-BUILD CALCULATIONS SHALL BE SUBMITTED TO AND REVIEWED BY GENERAL CONTRACTOR, ARCHITECT, AND STRUCTURAL ENGINEER PRIOR TO FABRICATION OR PROCUREMENT. UNLESS OTHERWISE SPECIFIED, ALL SUBMITTALS TO BE ELECTRONICALLY TRANSMITTED IN PORTABLE DOCUMENT FORMAT (PDF). ALLOW A MINIMUM OF FIVE (5) DAYS FOR REVIEW OF SUBMITTALS.
2. SUBMITTALS SHALL BE DATED AND UNIQUELY NUMBERED. ALL REVISIONS, UPDATES, AND RESUBMITTALS SHALL HAVE A REVISION NUMBER. ALL DEVIATIONS FROM THESE STRUCTURAL DRAWINGS SHALL BE CIRCLED BY A CLOUD WITH THE NOTE "ENGINEER VERIFY".
3. SUBMITTALS SHALL NOT BE CHANGED NOR DEVIATED FROM UNLESS RESUBMITTED AND APPROVED.
4. SUBMITTAL REVIEW IS OF A GENERAL NATURE ONLY FOR CONFORMANCE WITH THE DESIGN INTENT. REVIEW DOES NOT IMPLY THAT CONTRACTOR HAS CORRECTLY INTERPRETED THE CONTRACT DOCUMENTS. ALL RESPONSIBILITY FOR CONFORMANCE WITH CONTRACT DOCUMENTS REMAINS WITH THE CONTRACTOR.
5. THE FOLLOWING ITEMS SHALL BE SUBMITTED TO THE STRUCTURAL ENGINEER FOR REVIEW:
   1. STRUCTURAL STEEL MATERIAL CERTIFICATES
   2. STEEL FABRICATOR QUALIFICATIONS
   3. WELDING PROCEDURE SPECIFICATIONS (WPS)
   4. STRUCTURAL STEEL SHOP DRAWINGS
   5. POST INSTALLED ANCHOR PRODUCT DATA
   6. SPECIAL INSPECTION REPORTS

SECTION 1-H SPECIAL INSPECTIONS:

1. THE OWNER OR REGISTERED DESIGN PROFESSIONAL ACTING ON THE OWNER'S BEHALF SHALL RETAIN AN INDEPENDENT TESTING AGENCY TO PERFORM ALL REQUIRED TESTING AND INSPECTIONS.
2. THE CONTRACTOR IS RESPONSIBLE FOR COORDINATING WITH TESTING AGENCY AND SPECIAL INSPECTOR TO SCHEDULE ALL REQUIRED TESTS AND INSPECTIONS.
3. SPECIAL INSPECTIONS SHALL BE IN ACCORDANCE WITH THE STATEMENT OF SPECIAL INSPECTIONS ON S000.

SECTION 1-I STRUCTURAL OBSERVATIONS:

1. STRUCTURAL ENGINEER WILL REVIEW CONSTRUCTION FOR GENERAL CONFORMANCE WITH THE STRUCTURAL DRAWINGS.
2. STRUCTURAL OBSERVATION DOES NOT REPLACE ANY REQUIRED TESTING OR INSPECTIONS.
3. CONTRACTOR SHALL NOTIFY STRUCTURAL ENGINEER AT LEAST TWO (2) WORKING DAYS PRIOR TO CONCEALING ANY STRUCTURAL ITEMS.

SCHEDULE OF STRUCTURAL OBSERVATIONS:
1. GUARDRAIL INSTALLATION

EXPANSION JOINTS:

ALL EXPANSION JOINTS IN THE ELEVATED WALKWAY ARE EXISTING JOINTS. APPLICATION OF THE WALKWAY COATING WILL NOT INCREASE MOVEMENT OF THE WALKWAY. THE EMSEAL DSM EXPANSION JOINT MATERIAL THAT IS PROPOSED TO FILL THE JOINT (DETAIL 4/A301) IS TO LIMIT WATER INSTRUSION AND SUBSEQUENT CORROSION OF THE EXISTING STEEL MEMBERS. THE STRUCTURAL BEHAVIOR OF THE EXPANSION JOINT WILL REMAIN UNCHANGED.

ALLANA BUICK & BERS
Making Buildings Perform Better
990 Commercial Street, Palo Alto, CA. 94303
p 650.543.5600 - f 650.543.5625 - abbae.com

Terra Linda High School
320 Nova Albion Way
San Rafael, CA 94903

Breezeway Waterproofing and Railing

FOR:
Greystone West
621 W Spain Street
Sonoma, CA 95476

ISSUE

Mark	Description	Date
	Bid Set	03/19/2021
	DSA Re-Submission	02/22/2021
	DSA Submission	12/11/2020

DATE	12.11.2020
PROJECT NO.	19-6104.01
CAD DWG FILE	6104_S000.dwg
DRAWN BY	AR
CHECKED BY	EB

© COPYRIGHT ALLANA BUICK & BERS, INC. 2020

SHEET TITLE
STRUCTURAL NOTES, SPECIAL INSPECTIONS AND TESTING

SCALE: NOTED ON DRAWINGS

SHEET **S000**

DSA RESUBMISSION, 02/22/2021

Bridge Repair at Terra Linda High School

320 Nova Albion Way

San Rafael, CA 94903

Location Map

Project Location

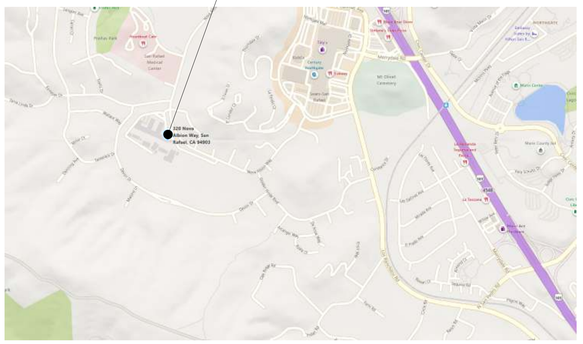

Aerial Photo

Project Location

Project Info.

Property Owner:	Terra Linda High School 320 Nova Albion Way San Rafael, CA 94903
Project Address:	320 Nova Albion Way San Rafael, CA 94903
Scope of Work:	See Architectural Drawings

Code Compliance

CBC	California Building Code 2019
CEC	California Electrical Code 2019
CPC	California Plumbing Code 2019
CMC	California Mechanical Code 2019
CFC	California Fire Code 2019
CEC	California Energy Code 2019
CRC	California Residence Code 2019
IBC	International Building Code 2018

Drawing Index

Sheet No.	Sheet Name
S0.0	Structural Notes
S1.0	Existing Floor Plan
S2.0	Existing Bridge Elevation
S3.0	Section & Details

GENERAL

These notes apply to all drawings.

1. All work shall be in accordance with all Federal, State and Local Building Codes and Safety ordinances in effect at the place of building.
2. In the event certain features of the construction are not fully shown, their constructions shall be shown for similar features.
3. Any conflicts or discrepancies between the drawing and site conditions shall be immediately brought to the attention of the engineer and corrected as directed by the Engineer.
4. Contractor agrees that he shall assume sole and complete responsibility for job site conditions during the course of construction of this project, including safety of all persons and property; that this requirement shall apply continuously and not be limited to normal working hours; and that the contractor shall defend, indemnify and hold the Owner and the Engineer harmless from any and all liability, real or alleged, in connection with the performance of work on this project, excepting for liability arising from the sole negligence of the Owner or the Engineer.
5. Contractor acknowledges that he has thoroughly familiarized himself with the building site conditions, grades, etc., with the drawings and specifications, with the delivery facilities and all other matters and conditions which may affect the operations and completion of the work and assumes all risks therefrom.
6. The drawings schematically indicate existing and new construction. Due to the nature of the work, adjustments will likely be required in the field to meet the design objectives. Such adjustment are part of the contract and shall be included in the lump sum bid.
7. Contractor shall be responsible for all temporary shoring. Shoring shall be provided to support the existing structure until all work on the drawings is completed.
8. The Contractor shall be responsible for the coordination of all work including, but not limited to that shown on these drawings.
9. The Contractor shall verify all existing dimensions prior to fabricating or procuring components.

METAL

1. All bolts and threaded rod to be ASTM A307. Provide standard cut washers under all nuts and bolt heads
2. Where bolts or other items are noted to be embedded in existing concrete, use Simpson Strongtie SET-XP or SET-3G, (or approved equal) where epoxy is specified. Bolts that are embedded in epxy to be fully threaded.
3. All structural and miscellaneous steel shall comply with ASTM A36. All work shall be in accordance with the AISC Specification for the Design, Fabrication and Erection of Structural Steel for Buildings.
4. All metals used in exterior applications shall be Hot Dipped Galvanized or protected by anti-corrosion compound.
5. All HSS shall have a minimum grade of ASTM A500 Grade B or Grade C.

WELDING

1. All welding, unless otherwise specified, shall be fillet or full welded all around with the weld size equal to the thickness of respective welded member.
2. All butt welds shall be full depth penetration.
3. Welding testing required full penetration butt welds (site welding) 100% ultrasonic and 100% magnetic particle or penetratio inspection. Full penetration butt welds (factory welding) minimum 30% ultrasonic and 30% magnetic particle. Fillet welds minimum 30% magnetic partical or penetration inspection.
4. Weld shall have minimum E70XXX, Maximum capacity 19000 psi or Flux Core E71T-8, NR-232

SPECIAL NOTES

1. Wherever the construction documents require that materials and workmanship conform to specifically named codes or standards, in each instance materials and workmanship shall meet or exceed the requirements or the latest edition of the specifically named codes or standards.
2. In procuring all items used in the work, it is the Contractor's responsibility to verify the detailed requirements of the specifically named codes and standards and to verify that the items procured for use in this work meet or exceed the specified requirements.
3. When required by the technical specifications or by written request from the Engineer, the Contractor shall deliver to the Engineer proof that the materials, workmanship, or both, meet or exceed the requirements of the specifically named code or standard. such proof shall be in a form as requested by the Engineer, and may be in the form of a certificate of compliance signed by an authorized officer of the manufacturing company, or a certified report of tests conducted by a testing agency reviewed by the Engineer.
4. The Engineer reserves the right to reject items incorporated in the work that fail to meet specified minimum requirements. The Engineer further reserves the right, and without prejudice to any other recourse the engineer may take, to review non-complying items subject to an adjustment in the compensation payable under contract and determined in accordance with the provisions of the contract documents.

- **GENERAL CONTRACTOR IS RESPONSIBLE FOR MEANS, METHOD AND TECHNIQUE ON CONSTRUCTION.**
- **THIS PLAN SHALL NOT BE USED AT OTHER LOCATION EXCEPT AT THE ADDRESS STATED ABOVE.**

Waterproofing/Flashing Designed by Others

REGISTERED PROFESSIONAL ENGINEER ALFRED B. RAFFIN, JR. C070 Exp. 06/30/22 CIVIL STATE OF CALIFORNIA

No.	Date	Description

ALLANA BUICK & BERS
Making Buildings Perform Better
860 Commercial Street, Palo Alto, CA 94303
t 650.543.9600 f 650.543.9626 allana.com

REGISTERED PROFESSIONAL ENGINEER BRIAN DENNIS OLSON S 6080 STRUCTURAL STATE OF CALIFORNIA

03-02-21

Structural Notes

Terra Linda High School
320 Nova Albion Way
San Rafael, CA 94903

Date:	10/01/2020
Project No:	ABBX2004
Drawn By:	L.H.
Design By:	A.B.R.
Checked By:	A.B.R.
Scale:	1 1/2" = 1'-0"

Sheet

S0.0

ABBX2004	Revision
Terra Linda High School	10/01/2020

3/1/2021 10:21:14 AM D:\Dropbox\Project\abbx2004 - Terra Linda HS - Bridge\design\Terra Linda - Bridge Revision 1.rvt

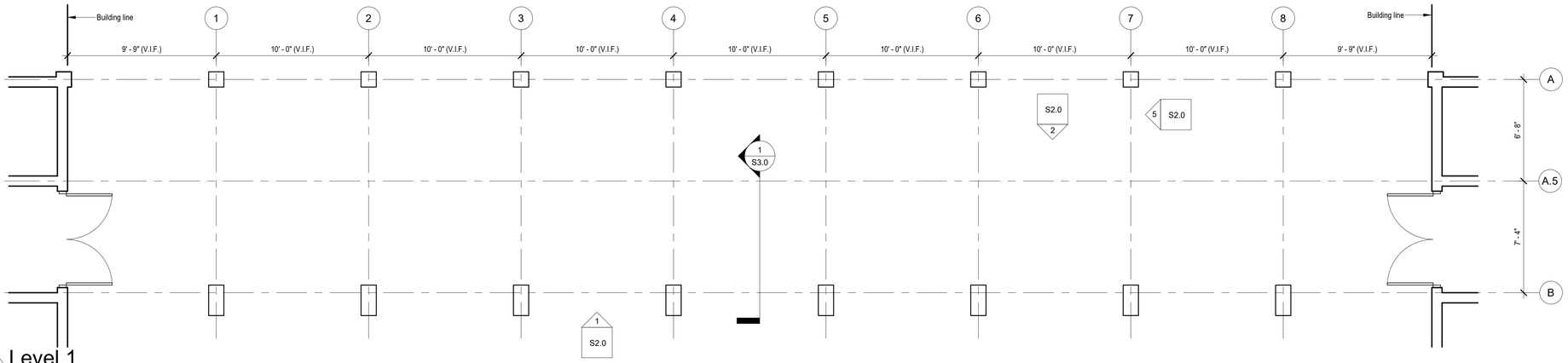

1 Level 1
Scale: 1/4" = 1'-0"

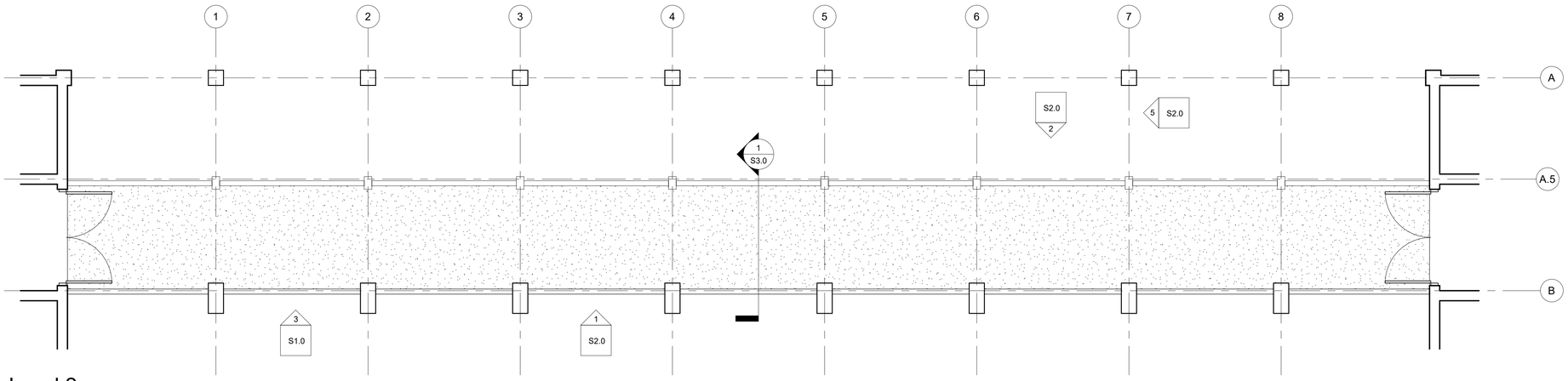

2 Level 2
Scale: 1/4" = 1'-0"

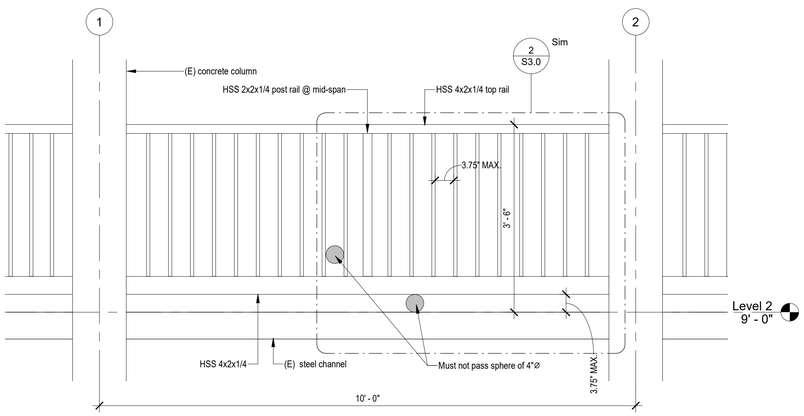

3 Railing Elevation
Scale: 3/4" = 1'-0"

- GENERAL CONTRACTOR IS RESPONSIBLE FOR MEANS, METHOD AND TECHNIQUE ON CONSTRUCTION.
- THIS PLAN SHALL NOT BE USED AT OTHER LOCATION EXCEPT AT THE ADDRESS STATED ABOVE.

Waterproofing/Flashing
Designed by Others

REGISTERED PROFESSIONAL ENGINEER
ALFRED B. RAFUSE
Exp. 06/30/22
CIVIL
STATE OF CALIFORNIA

No.	Date	Description

ALLANA BUICK & BERS
Making Buildings Perform Better
850 Commercial Street, Palo Alto, CA 94303
t 650.543.3800 f 650.543.3803 allana.com

REGISTERED PROFESSIONAL ENGINEER
BRIAN DENNIS OLSON
S 6080
STRUCTURAL
STATE OF CALIFORNIA
03-02-21

Existing Floor Plan

Terra Linda High School
320 Nova Albion Way
San Rafael, CA 94903

Date:	10/01/2020
Project No:	ABBX2004
Drawn By:	L.H.
Design By:	A.B.R.
Checked By:	A.B.R.
Scale:	As indicated

Sheet
S1.0

ABBX2004 Revision
Terra Linda High School 10/01/2020

3/1/2021 10:21:15 AM D:\Dropbox\Projectabbx2004 - Terra Linda HS - Bridge\design\Terra Linda - Bridge Revision 1.rvt

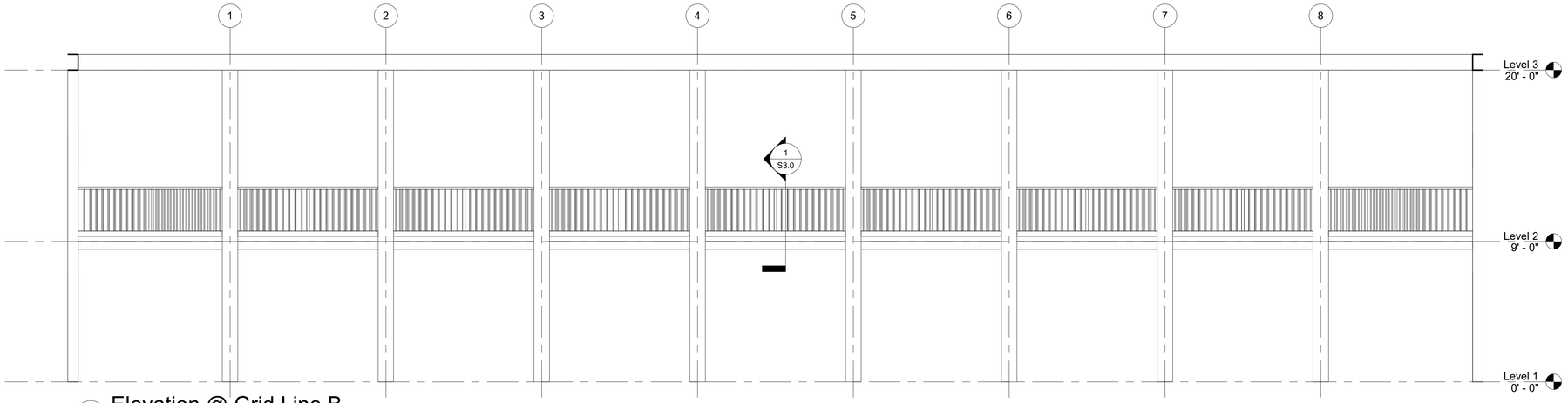

1 Elevation @ Grid Line B
Scale: 1/4" = 1'-0"

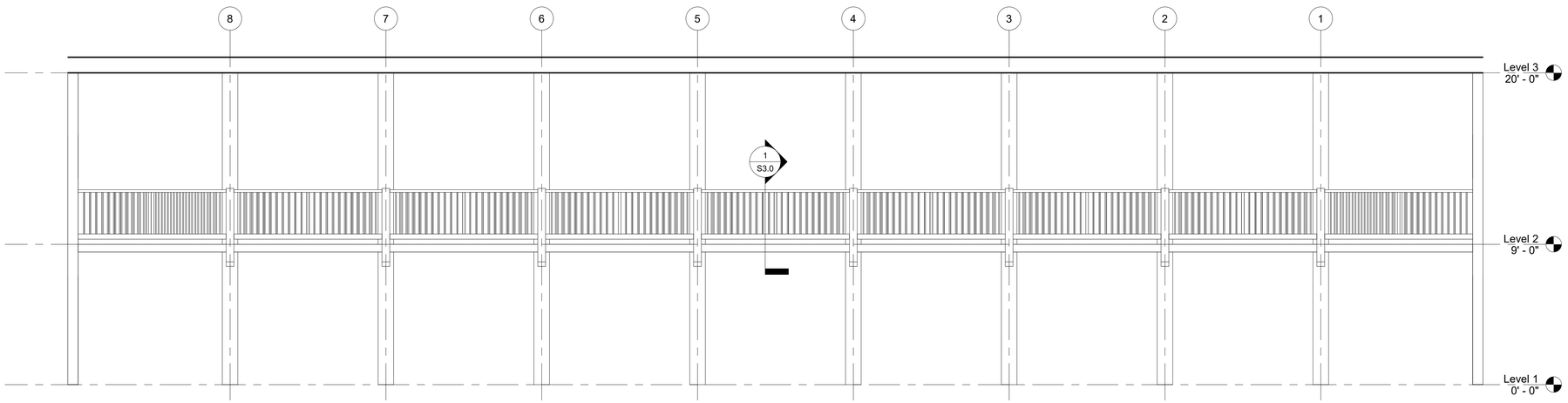

2 Elevation @ Grid Line A.5
Scale: 1/4" = 1'-0"

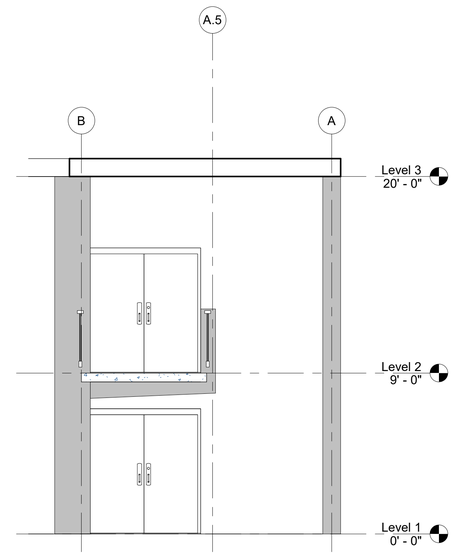

5 Elevation 3 - a
Scale: 1/4" = 1'-0"

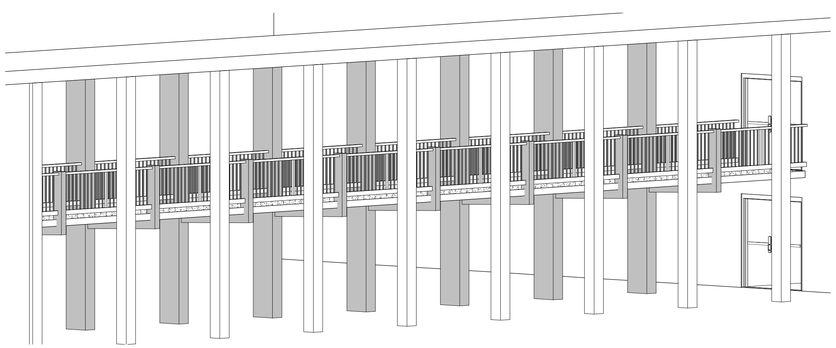

3 3D View - From Grid A
Scale:

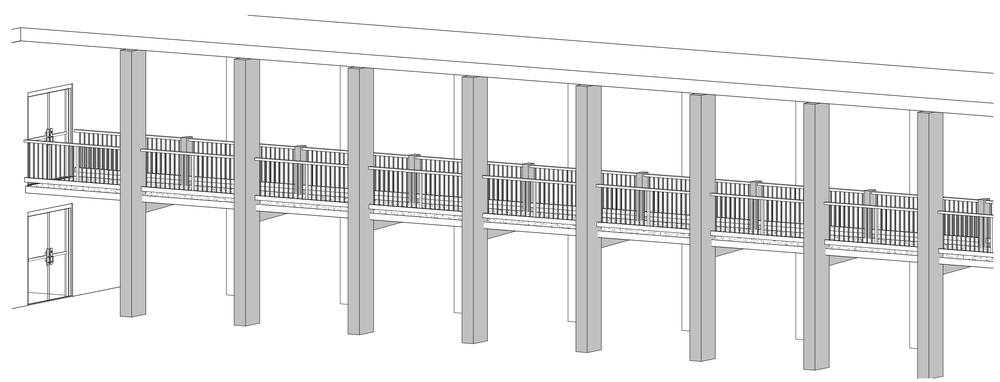

4 3D View - From Grid B
Scale:

No.	Date	Description

ALLANA BUICK & BERS
Making Buildings Perform Better
850 Commercial Street, Palo Alto, CA 94303
t 650.543.3800 f 650.543.3803 allana.com

REGISTERED PROFESSIONAL ENGINEER
BRIAN DENNIS OLSON
S 6080
STRUCTURAL
STATE OF CALIFORNIA
03-02-21

Existing Bridge Elevation

Terra Linda High School
320 Nova Albion Way
San Rafael, CA 94903

Date:	10/01/2020
Project No:	ABBX2004
Drawn By:	L.H.
Design By:	A.B.R.
Checked By:	A.B.R.
Scale:	1/4" = 1'-0"

REGISTERED PROFESSIONAL ENGINEER
ALFRED B. RAFFERTY III
C 39007
Exp. 06/30/22
CIVIL
STATE OF CALIFORNIA

Sheet
S2.0

ABBX2004 Revision
Terra Linda High School
10/01/2020

3/1/2021 10:21:16 AM D:\Dropbox\Projects\abbx2004 - Terra Linda HS - Bridge\design\Terra Linda - Bridge Revision 1.rvt

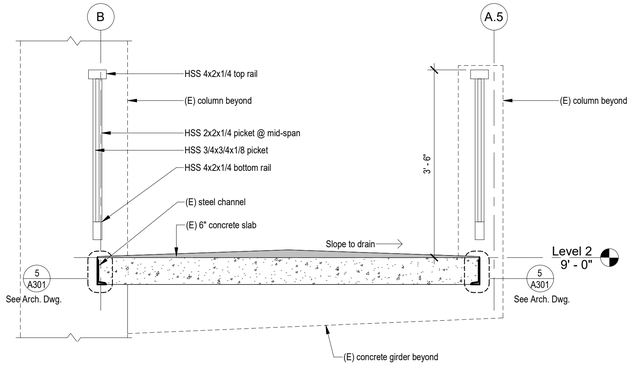

1 Section 1
Scale: 3/4" = 1'-0"

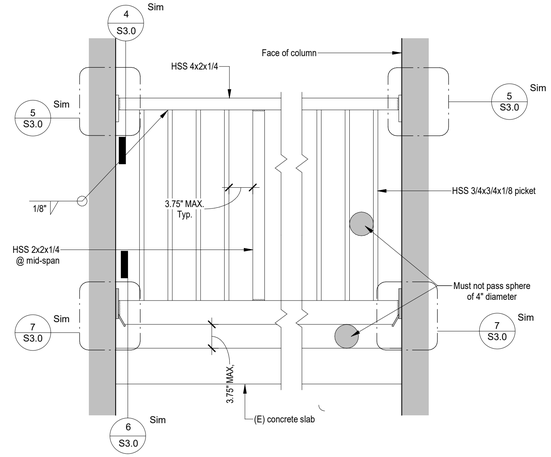

2 Metal Railing - Elevation
Scale: 1" = 1'-0"

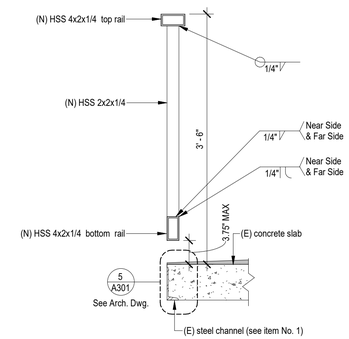

3 Metal Railing - Section
Scale: 1" = 1'-0"

Note:

- (E) Steel Preparation
  - Use steel wire or sand blaster (whichever is applicable) to clean steel to bare metal.
  - Apply anti-corrosive compoundand primer before painting:
    a. Primer: Tnemec PerimePrime Series 394
    b. Intermediate Coat: Tnemec Chembuild Series 135
    c. Finish Coat: Tnemec Enduratone Series 1028
  - Contractor may submit comparable product or equal for review.
2. (E) Concrete Repair
   - Remove loose concrete, clean & roughened remaining surface.
   - Apply Sika Armatec 110 concrete bonding agent or equal.
   - Use Sika Quick Patch or equal.
3. Fill (E) Concrete Cavity (Over Head/Vertical Application)
   - Remove loose concrete, clean & roughened remaining surface.
   - Apply Sika Armatec 110 or equal.
   - Use Sika Quick VOH or equal.
4. For Sika Products
   - Contractor to consult with Sika represntative for applicability to field condition before purchasing product.

Contact: Brad Kamin 510-701-7198
KAMIN.BRAD@SIKA-CORP.COM

5. Contractor to locate steel reinforcement at the column before drilling "**DO NOT CUT REBARS**"
6. Shim plates up to 1/8" thick may be installed between steel plates and concrete columns to faciliate.

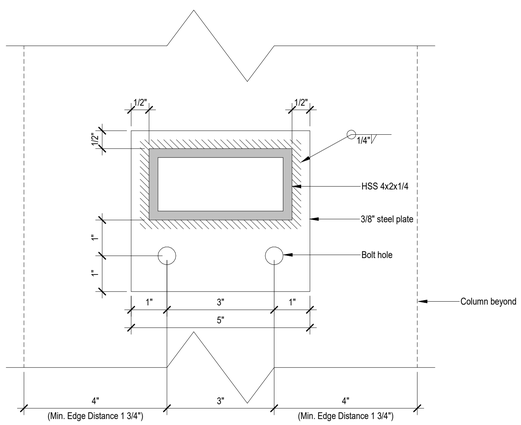

4 Steel Plate 1 - Section
Scale: 6" = 1'-0"

See Architectural drawing (5/A301)
for demo of coping channel

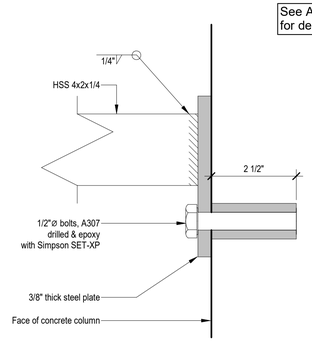

5 Steel Plate 1 - Elevation
Scale: 6" = 1'-0"

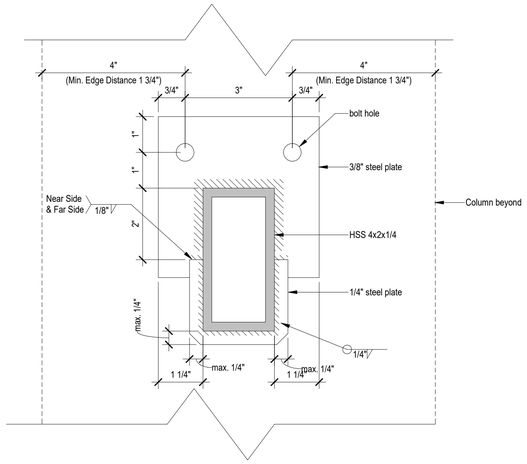

6 Steel Plate 2 - Section
Scale: 6" = 1'-0"

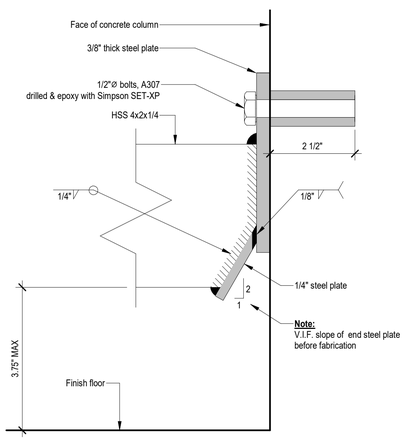

7 Steel Plate 2- Elevation
Scale: 6" = 1'-0"

- **GENERAL CONTRACTOR IS RESPONSIBLE FOR MEANS, METHOD AND TECHNIQUE ON CONSTRUCTION.**
- **THIS PLAN SHALL NOT BE USED AT OTHER LOCATION EXCEPT AT THE ADDRESS STATED ABOVE.**

Waterproofing/Flashing
Designed by Others

REGISTERED PROFESSIONAL ENGINEER
ALFRED B. RAFUL JR.
Exp. 06/30/22
CIVIL
STATE OF CALIFORNIA

No.	Date	Description

ALLANA BUICK & BERS
Making Buildings Perform Better
850 Commercial Street, Palo Alto, CA 94303
t 650.543.3800 f 650.543.3803 allana.com

REGISTERED PROFESSIONAL ENGINEER
BRIAN DENNIS OLSON
S 6080
STRUCTURAL
STATE OF CALIFORNIA
03-02-21

Section & Details

Terra Linda High School
320 Nova Albion Way
San Rafael, CA 94903

Date:	10/01/2020
Project No:	ABBX2004
Drawn By:	Author
Design By:	Designer
Checked By:	Checker
Scale:	As indicated

Sheet
S3.0

ABBX2004 Revision
Terra Linda High School 10/01/2020

3/1/2021 10:21:16 AM D:\Dropbox\Projects\abbx2004 - Terra Linda HS - Bridge\design\Terra Linda - Bridge Revision 1.rvt